SYSTRON DONNER

SYSTRON DONNER CORPORATION

ADDENDUM

MODEL RMS S7013

The RMS S7013 Rack Mount Power Supply consists of two Model TPZC15-2 OVS6501 and one Model VPH5.2-30 MOVS6489 Power Supplies, controls and appropriate interconnect wiring.

Refer to enclosed schematic C065017 and parts list for S7013 description.

The Models TPZC15-2 OVS6501 and the VPH5.2-30 MOVS6489 Power Supplies are standard Models TPZC15-3.6 OV and VPH5-60 MOV Power Supplies as described in the enclosed manuals with special modifications S6501 and S6489 added.

Special Modification S6501 consists of:

Input: 208,220,230 and 235V ±10%, 50/60 Hz operation.
Provide 15V 2A output.
Set Overvoltage to 17V ±0.2V.
Set Overload Protection to 2.3A ±0.1A.
Set Volts Out for 15.0V.
Special Schematic: D124200.
Special Parts List: #065102.

Special Modifications S6489 consists of:

Input: 208,220,230 and 235V ±10%, 50/60 Hz operation.
Temperature Range: 25-50 C.
Output Volts: 4.9 - 5.7V.
Overvoltage set to 6.2 ±.2V.
Overload Protection set to 35 ±1A.
Output Amps: 30A.
Special Schematic: D124150.
Special Parts List: #065115.

MODEL RMS S7013
RACK MOUNT

ITEM NO.	SIZE	PART NUMBER	DESCRIPTION	REFERENCE NO.	ASSY QTY	ACT. CODE	ISS. QTY	SHT QTY
1		065035 P/L	SHIPPING ASS'y-RMS-S7013		X	X		
3	E	065222	CHASSIS ASS'y (RAH-2B)	PD27727	1	2		
4	D	097733	FRONT PANEL		1	2		
5		T920010	HANDLES		2	1		
6	D	T100992	MODULE MTG. BKT.		2	2		
7			TPZC15-2-0VS6501	SEP P/L	2	1		
8			VPH5.2-30MOVS6489	SEP P/L	1	1		
9		780985	NAMEPLATE		1	1		
10		850044	4-PIN BARRIER STRIP	TB101-102	2	1		
12	A	PD27728	CONTROL PANEL ASS'y		1	2		
13	C	065016	CONTROL PANEL FINISH		1	2		
14								
15		600300	VOLT ADJ POT 5K-2w	R101-R106	2	1		
16		880140	Switch-Slide	S1-S2	2	1		
17		753219	METER 20V/4A	M101-M102	2	1		
18		T670021	SHUNT 4 AMP	R103-R108	2	2		
19	C	T109242	" FAB DWG		1	R		
20		840220	SHAFT-LOCKS		2	1		
21		T990043	FLAT-WASHER		2	1		
22		T980320	HEX-NUTS		2	1		
23		T990101	LOCK-WASHER		2	1		
24		860297	ROUND-SPACER		2	1		
25		620660	RESISTOR 19.9K 1/2W 1%	R105-R110	2	1		
26		860020	#4-STANDOFFS		8	1		
28	A	PD27728	METER BD ASS'y		1	2		
29	B	124062	METER POT BD		1	2		
30		610010	RESISTOR 18Ω 1/2W	R104-R109	2	1		
31		600020	POT 50Ω 1.5W	R102-R107	2	1		
33	A		CONTROL PANEL WIRING	PD27729	1	R		

MODEL	JOB NO.	LOT QTY	LOT NO.	CODE IDENT
				52542

PLANNER | PREP | DATE | SYSTRON DONNER CORPORATION

CHK'D | APP'D | MAT. DUE | B/U REQ. | B/U COMP | USED ON

RMS-S7013
RACK ADAPTER

DRAWING NO.

REF	SIZE	PART NO.	REV
—	P	065035	

SHEET 1 OF 2

REVISIONS DESCRIPTION

REV

FORM E8-A 11 JUL 75

ITEM NO.	SIZE	PART NUMBER	DESCRIPTION	REFERENCE NO.	ASSY QTY	ACT. CODE	ISS. QTY	SHT QTY
			SHIPPING-ASS'y-RMS-S7013		X	X		
36		2773101	DC-CABLE ASS'y (SP534)		1	1		
37			WIRE LIST	PD27731	1	R		
40A			TB101 & 102 WIRING	PD27740	1	R		
42A			A1 & A2 UNIT WIRING	PD27730	1	R		
45C			SCHEMATIC	065017	1	R		

MODEL	JOB NO.	LOT QTY	LOT NO.	CODE IDENT 52542
PLANNER	PREP DATE	SYSTRON DONNER CORPORATION		
MAT. DUE	CHK'D / APP'D	RMS-S7013 RACK ADAPTER		
B/U REQ.		DRAWING NO. REF — SIZE P PART NO. 065035 REV		
B/U COMP	USED ON	SHEET 2 OF 2		

REVISIONS DESCRIPTION

REV

FORM EB-A 11 JUL 75

These drawings are furnished for information purposes only. The furnishing of these drawings does not constitute a license for manufacture, competitive solicitation or other purposes.

REVISIONS				
SYM	ZONE	DESCRIPTION	DATE	APPROVED
A		WAS RMS-S8000	2-20-78	RJB

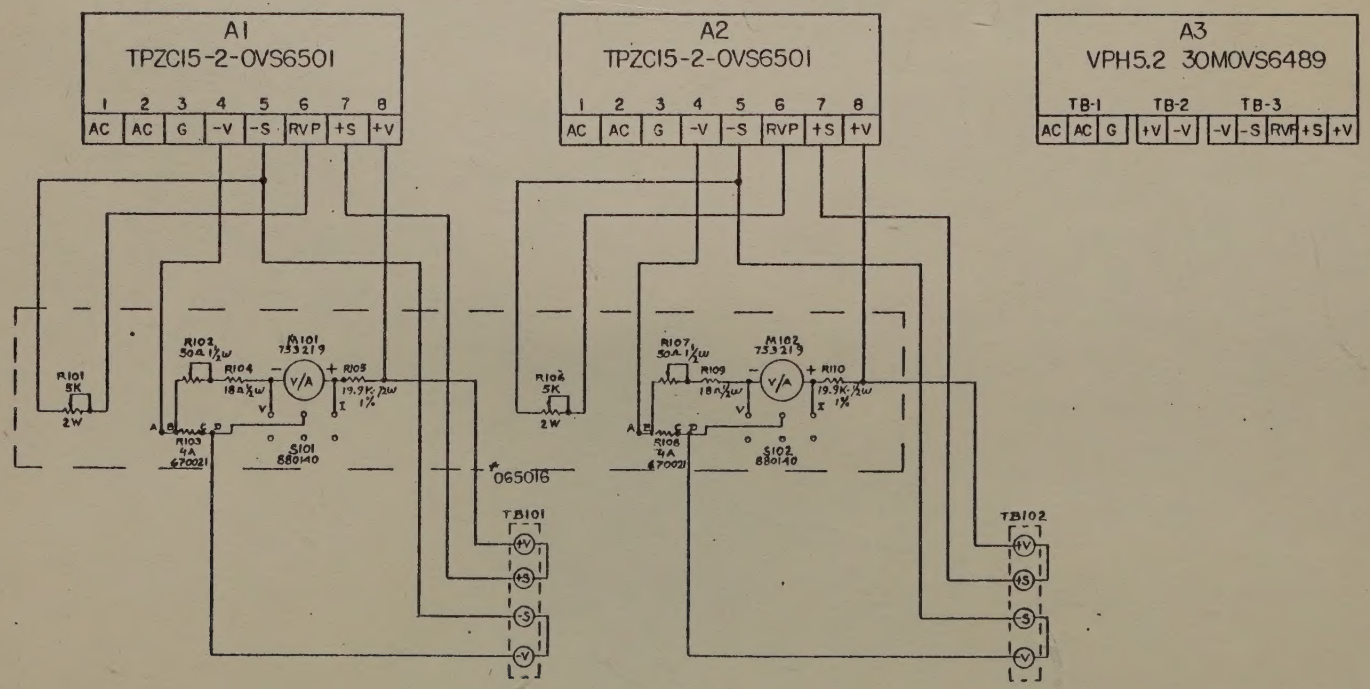

UNLESS OTHERWISE SPECIFIED DIMENSIONS ARE IN INCHES
TOLERANCES ON
FRACTIONS ± 1/64 DECIMALS ± .005 ANGLES ± ½°

MATERIAL:

FINISH:

NEXT ASSY | USED ON

APPLICATION

DRAWING STARTED | DATE
DRAWN
CHECKED
ENGR
RELEASED

SYSTRON-DONNER CORPORATION
WESTBURY SYSTRON DONNER NEW YORK

RMS-S7013

SCHEMATIC

CODE IDENT NO	SIZE		REV
09206	C	065017	A

SCALE | SHEET

SYSTRON DONNER
Member THORN EMI Group

MODEL TPZC15-2OV S6501

INSTRUMENT DIVISION

ADDENDUM

The Model TPZC15-2OV S6501 is similar to the standard Model TPZC15-3.6OV as described in the enclosed manual with special modification S6501 added.

Special Modification S6501 consist of:

1. Providing for 208,220, 230 and 235 volts ±10%, 50/60 Hz input operation.
2. Providing 15 volt 2 amp output.
3. Change T101 part number to 504292.
4. Add input voltage terminal strip with voltage markings part number 850064.
5. Set Overvoltage to 18.7V ±1.0V.
6. Set Overload protection to 2.3A ±0.1A.
7. Set Volts Out for 15.0V.
8. Refer to schematic 012420 for circuit description.

2727 Systron Drive • Concord, California 94518 • U.S.A.
Tel. (415)676-5000 • TWX: 910-481-9479 • Cable: SYSTRON DONNER
FSCM No. 52542

Copyright © 1982 Systron Donner
Printed in U.S.A.

INSTRUCTION MANUAL

This manual describes the TPZ Super Trypack Modular Power Supply Series. It contains information on the following:

Model TPZC15D-1.8 (Dual Output)

TP SERIES
SUPER TRYPACK MODULAR
POWER SUPPLIES

MODEL NO.

Copyright © 1978 Systron-Donner Corporation

SYSTRON DONNER CORPORATION

CONCORD INSTRUMENT DIVISION
10 Systron Drive • Concord, California 94518 • U.S.A.
Tel: (415) 676-5000 • TWX: 910-481-9479 • Cable: SYSTRONDONNER
FSCM No. 52542

Printed in U.S.A.

SYSTRON DONNER
Member THORN EMI Group

TEST & MEASUREMENT GROUP OF SYSTRON DONNER WARRANTY POLICY

I Warranty

The Test & Measurement Group of Systron Donner warrants that at the time of shipment the products manufactured by Systron Donner's T & M Group and sold hereunder will be free from defects in material and workmanship and will conform to the specifications furnished by or approved in writing by Systron Donner's T & M Group

II Warranty

A **The warranty period for products published in our latest product catalog will be one year from the date of shipment. This warranty is extended only to the original buyer.**

B The warranty period for products published in prior catalog, will be 90 days from the date of shipment.

C The warranty period for modified standard products, custom products, or new spare part assemblies will be 90 days from the date of shipment

D The warranty period for systems or assemblies of miscellaneous components and products will be limited to the warranty for the stand alone component or instrument. The system itself is not guaranteed unless a specific installation and service agreement has been negotiated between Systron Donner and the customer. In this latter case, the warranty period will be 30 days after the installation of the system while the various portions of the system will be limited to the normal component or instrument stand alone warranty, and for non Systron Donner material within the system that is furnished by Systron Donner the warranty will be limited to the supplier's normal warranty

III Warranty Adjustments

A If any defect within this warranty appears, Purchaser shall notify Seller immediately

B Systron Donner's T & M Group agrees to repair or furnish a replacement for, but not install, any product which, within the standard warranty shall, upon test and examination by Systron Donner's T & M Group, prove defective within the above warranty period.

C No product will be accepted for return or replacement without the written authorization of Systron Donner's T & M Group. Upon such authorization and in accordance with instructions by Systron Donner's T & M Group, the product will be returned to the original manufacturing location, shipping charges prepaid by Purchaser

IV Exclusions from Warranty

A The foregoing warranty is in lieu of and excludes all other expressed or implied warranties of merchantability or fitness or otherwise.

B Systron Donner's T & M Group will not be liable for any special or consequential damages or for loss, damages or expense directly or in[illegible] arising from the use of the products, or any inability to use them either separately or in combination with any other equipment [illegible] or from any other cause

C The warranty does not extend to any product manufactured by Systron Donner's T & M Group which has been subjected to misuse, [illegible] installation or to use in violation of instructions furnished by Systron Donner's T & M Group

D The warranty [illegible] to or apply to any unit which has been repaired or altered at any place other than at a Systron Donner T & M Group [illegible] not expressly approved by Systron Donner's T & M Group, not to any unit, the serial number of which [illegible]

E [illegible] or replacement items only to the extent of the balance remaining of the items of [illegible] above in Paragraph

F A freight [illegible] Purchaser

[illegible] in the Test & Measurement Group include
[illegible] Division – [illegible] CA
A [illegible] Division – [illegible] CA
[illegible] – Munich, West Germany

[illegible]

SYSTRON DONNER
Member THORN EMI Group

INSTRUMENT
DIVISION

2727 Systron Drive, Concord, CA 94518
Phone (415) 676-5000
TWX 910-481-9479

PROPRIETARY RIGHTS STATEMENT

The design information contained herein is the sole property of Systron Donner. The disclosure of this information does not constitute the release of proprietary rights thereof, but is to be used for informational purposes only. Permission to reproduce this information of the product described herein must be obtained in writing from Systron Donner.

Copyright © 1982 Systron Donner
Printed in U.S.A.

TABLE OF CONTENTS

SECTION			PAGE
1	DESCRIPTION		
	1.1	Introduction	1-1
	1.2	Description	1-1
	1.3	General Features	1-1
	1.3.1	Constant Voltage Mode	1-1
	1.3.2	Automatic Foldback Current Limiting	1-2
	1.3.3	Adjustable Overvoltage Protection	1-2
	1.4	Precautionary Measures	1-2
	1.4.1	Systems Considerations	1-2
	1.4.2	Terminal Post Resistance	1-2
	1.5	Specifications	1-3
	1.6	Accessories	1-6
	1.6.1	Features	1-6
2	INSTALLATION AND OPERATION		
	2.1	Mechanical Installation	2-1
	2.2	Electrical Connections	2-1
	2.3	Operating Configurations	2-2
3	THEORY OF OPERATION		
	3.1	General	3-1
4	CALIBRATION		
	4.1	GENERAL	4-1
	4.2	Test Equipment Required	4-1
	4.3	Performance Tests	4-1
5	OVS SERIES, OVERVOLTAGE PROTECTION MODULES		

LIST OF TABLES

Table	1-1	Specifications	1-3
	2-1	AC Input Wire Size	2-1
	5-1	Terminal Strip Designation	5-2

LIST OF ILLUSTRATIONS

Figure	1	Remote Sensing Diagram	2-2
	2	Block Diagram	3-2
	3	Performance Test Connections	3-2

SECTION 1
DESCRIPTION

1.1 INTRODUCTION

The Super Trypack (TP) Modular Series power supplies are flexible and dependable sources of DC power, which can be used to meet a variety of needs. These needs may range in scope from inspection and production testing, to laboratory bench testing, IC and systems applications.

The wide voltage adjustment range and modular size make these units well suited for specific systems applications. The ability to provide power packaged in minimum space with high reliability and performance meets the demads of most systems requirements.

This instruction manual provides general characteristics and specifications, operating procedures, theory of operation, calibration, parts list and related schematics for the Super Trypack Series Models,TPZC15D-1.8 dual output; TPZC5-6.5 OV; TPZC15-3.6 OV; TPZD5-10 OV; TPZD15-5.5 OV; TPZD28-3.6 OV; TPZE5-20 OV; TPZE28-6 OV; TPZE15-9.5 OV; TPZE12-11OV and TPZC28-2.4OV.

1.2 DESCRIPTION

The Super Trypack Series Modules are precision regulation DC power supplies designed for integration into military, industrial or commercial systems. Economy of design and planned quantity manufacturing make these modules ideal for OEM applications. These modules are designed for completely unattended operation and require no external heat sinking or forced air cooling.

1.3 GENERAL FEATURES

This series features UL design, low peak ripple, true series pass design, is independent of external heat sinks, is fully repairable and highly reliable, has the versatility for rack adapter compatibility for full systems, and an Overvoltage (OV) protection.

Output, sensing and AC power input terminals are located on a barrier strip mounted on the unit. The standard unit is equipped with a recessed voltage adjust screwdriver control.

1.3.1 Constant Voltage Mode

A constant voltage is maintained across the output terminals at any preset value within the rated voltage range, provided that the load does not draw more than the rated output current, as shown on the rating curve of the specifications sheet.

1.3.2 Automatic Foldback Current Limiting

Short circuit protection is provided by the automatic current limiting circuit which limits the maximum output current under all load conditions. The point at which automatic current limiting occurs is factory set at maximum. In the evnet of a short circuit, the output current is limited to approximately 10% of the rated current.

1.3.3 Adjustable Overvoltage Protection

Adjustable overvoltage (OV) protection modules are mounted externally, except on large quantity orders a built-in OV is available. These modules provide special circuitry to prevent the output from exceeding a preset voltage. An adjustment control is provided to vary the point at which the OV circuit activates. Refer to Table 1-1 Specifications for Overvoltage data. The OV protection ia available and in most cases standard on the TPZ power supplies. This feature is identified on the Model designation as OV; i.e. TPZ15-5.5 OV.

1.4 PRECAUTIONARY MEASURES

To assure proper regulation under all load conditions and to prevent severe distortions of the AC line voltage, it is very important to take into consideration the physical size and current handling capabilities of the input power line. Serious losses in regulation and an increase in ripple may result from underrated or overloaded AC input lines. The maximum AC impedance from the breaker box to the power supply should not exceed 0.75 ohms.

1.4.1 Systems Considerations

In systems applications, it is recommended that each power supply input power line be run separately to the AC distribution box in order to minimize cross coupling and interaction between equipment. Do not run sensitive signal leads such as the remote sensing leads in the same cable as the AC input without shielding.

1.4.2 Terminal Post Resistance

All terminals and shorting links serving outputs, sensing, and programming must be securely tightened before using. Serious loss of regulation and an increase in ripple can result due to a voltage drop caused by loose terminals and shorting links.

The specifications cited herein for regulation and ripple can be readily attained on every power supply providing the proper method of measurement is employed. The major consideration is that the highly stable meter and oscilloscope, specified in the calibration procedures, must be connected to the sensing terminals and not the load terminals. The reason for this precaution is that the voltage drop between the load terminals and sensing terminals will yield an inaccurate regulation ripple measurement.

1.5 SPECIFICATIONS

Table 1-1 is a complete list of standard specifications for the Super Trypack Series.

TABLE 1-1 SPECIFICATIONS

ELECTRICAL SPECIFICATIONS

Input:	105-132 VAC, 47-420 Hz[1].
Output:	Floating, Isolated from ground, 300 VDC maximu.
Regulatios, Line[2]:	0.02% or 5 mV[3], for 105-132 VAC line change at any output within specifications.
Regulation, Load[2]:	0.05% or 5 mV[3], no load to full load at any output within specifications.
Ripple[2]:	Less than 1 mV RMS (2 mV at 50 Hz and 400 Hz). Totla ripple and noise less than 5 mV (10 mV for 50 Hz and 20 mV at 400 Hz input). Measured to 10 MHz.
Stability[2]:	0.05% or 10 mV for 8 hours after warm-up. Measured at constant line voltage, load and ambient temperature.
Temperature Coefficient (per °C):	0.05%.
Temperature Range:	For higher temperature operation, all units should be derated by 1%/°C to 60°C and 1.5 1.5%/°C from 60°C to 71°C.
Recovery Time[2]:	50 µS to recover within 0.05% or 15 mV[3] of output voltage for 25% step change in rated load (in any region from 25% load to full load).
Short Circuit Protection[2]:	Automatic Current Foldback.
Remote Sensing:	Maintains rated regulation directly at the load. Maximum line drop 0.5 V per leg. Internal protection is supplied for open sensing leads.
Remote Programming:	Program accuracy is ±10%, ±100 mV on the TPZ Series.
Overvoltage Protection:	Built-in preset overvoltage protection is provided and designated with suffix "OV". Internal overvoltage protection is preset to approximately one volt above the maximum voltage output.

TABLE 1-1 SPECIFICATIONS (Cont'd)

ELECTRICAL SPECIFICATIONS (Cont'd)

UL Approval:	All units are designed for submission.
Dual Output Units:	Dual output units with tracking outputs is available in the TPZC Series. These units provide dual tracking positive and negative outputs with ±10 mV tracking for worst case conditions, plus an initial setting accuracy of ±25 mV.

[1]Maximum output power will be derated 15% at 400 Hz input.
[2]Regulated units only.
[3]Whichever is greater.

TERMINAL CONNECTIONS - Super Trypack Series

Model	1	2	3	4	5	6	7	8	9	10	11
TPZC Dual	AC	AC	G	-V (slave)	Com	+V (master)	-	-	-	-	-
TPZC	AC	AC	G	-V	-S	RVP	+S	+V	-	-	-
TPZD	AC	AC	G	+V	+S	RVP	-S	-V	-	-	-
TPZE*	AC	AC	G	-	+V	+V	+S	RVP	-S	-V	-V

**On TPZE units: Below 10V, terminals 5 and 6 and 10 and 11 are combined with single output terminals for 5:6 and 10:11.*

SIZE AND MOUNTING

Model	H	W	L	Mtg. Face
TPZC	3	4 5/8	9	4 5/8 x 9
TPZD	5	4 5/8	9 1/2	4 5/8 x 9 1/2
TPZE	5	8	10	8 x 10

RACK MOUNTING: Units may be intermixed with other Super Trypack modules and VPH in 3 1/2" and 5 1/4" rack adapters.

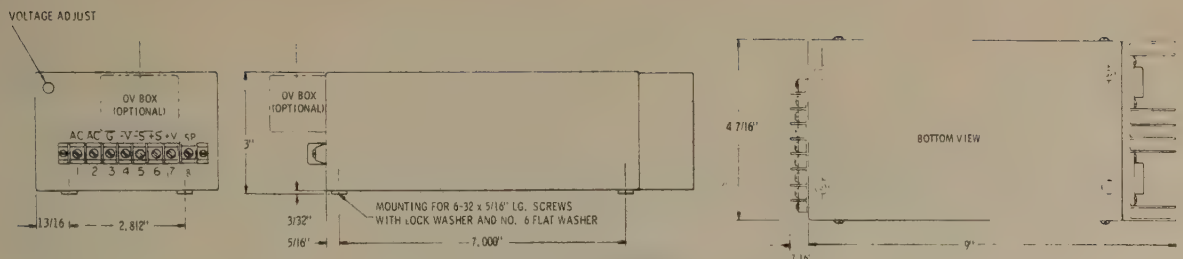

TP-C SERIES

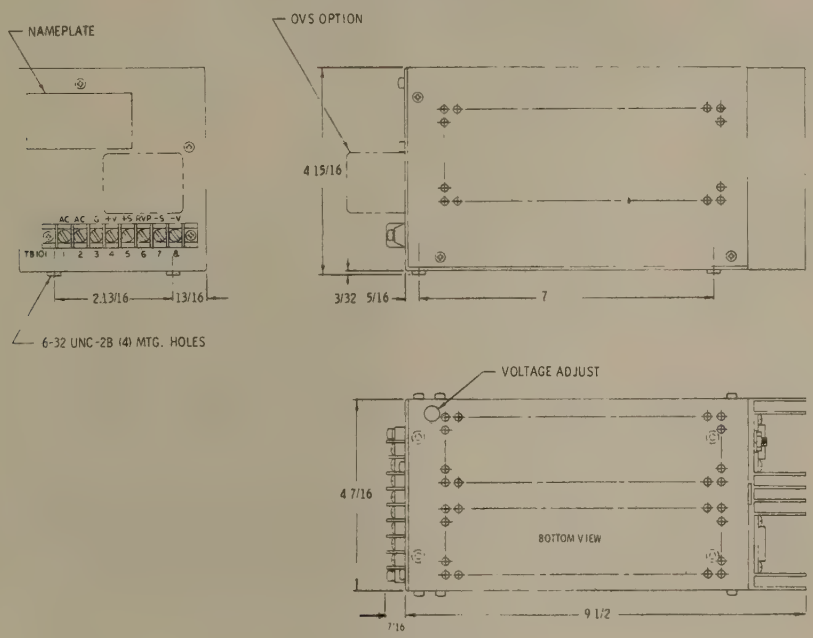

TP-D SERIES

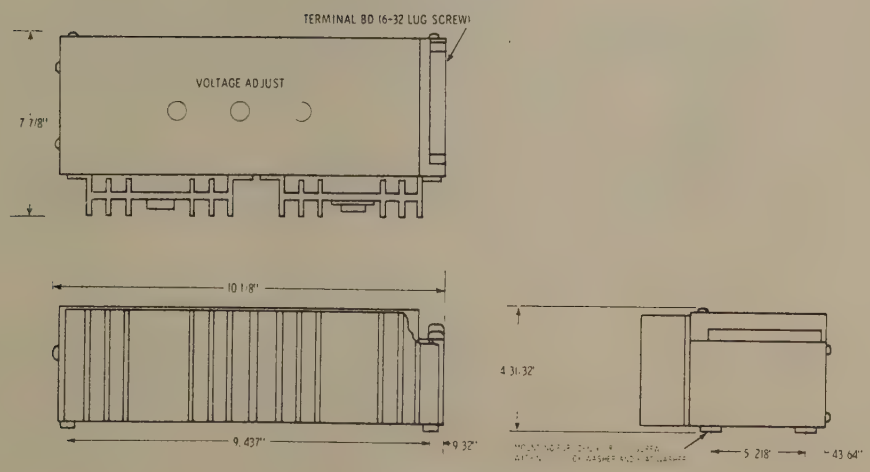

TP-E SERIES

1.6 ACCESSORIES

The ModuPanel Rack Adapter Series provides for full rack mounting versatility in the utilization of Super Trypak Modules power supplies. Modular front and rear panels provide for controls, meters and output connections.

A complete ModuPanel assembly is comprised of a selection of power supplies that provide the required outputs, a basic rack adapter of the RM series, and a selection of front and rear ModuPanels for outputs and operating controls. The complete system, with up to 16 outputs, is available factory wired and tested or as unwired assemblies.

1.6.1

The ModuPanel Rack Adapters feature system design flexibility, circuit breaker ModuPanel, metered and non-metered ModuPanel, built-in slide mounting capability, two 3-1/2" rack adapters, 14" and 21" depth (RM314/RM321) mount for the TPZC Modules, and two 5-1/4" rack adapters, 14" and 21" depth (RM514) mount for the TPZD (CM), TPZD or TPZE Modules and the (RM521) for the TPZC (CM), TPZD or TPZE.

How to determine the Multiple Output ModuPanel System Requirement

1) Select the Super Trypack Modules that meet that voltage and current requirements for the system.

2) Note the package size of each unit. The RM314 and RM321 will accept C packages and the RM514 and RM521 will accept C, D and E package sizes.

3) The ModuPanle rack adapters are capable of mounting a variety of sizes in the Super Trypack Series. The chart below lists the RM Series adapter and the "x" indicates those modules that fit within.

ModuPanel	C	D	E
RM314	x	-	-
RM321	x	-	-
RM514	x	x	x
RM521	x	x	x

Super Trypack Modular Series

Model	Adjustable Voltage Range			I_{max}	I^2 (V_{min})	Size	Temp. °C	Weight (lbs)	AC Line Current[4]	Imped-ance[5] Ohms	Recovery ΔI Amps[6]	Eff.[7] %
	V_{min}[2]	V	V_{max}									
LVW12-1.4	0	–	12.0	1.4	0.8	B	60	5	0.4	0.025	0.7	47
LVW20-1	0	–	12.0	1.0	0.5	B	60	5	0.4	0.060	0.6	50
LVW50-.32	0	–	50.0	0.32	0.29	B	60	5	0.4	0.040	0.2	48
LVS6-1.9	4.5	6.0	7.8	1.9	–	B	60	5	0.45	0.015	1.0	33
LVS12-1.4	11.0	12.0	15.0	1.4	–	B	60	5	0.57	0.025	0.7	42
LVS28-.75	22.0	28.0	33.0	0.75	–	B	60	5	0.60	0.060	0.6	50
TPZA15D-.5 (dual output)	11.5	14.5	15.5	0.5	0.38	A	60	5	0.5	0.015	0.12	50
TPZC5-6.5 OV	2.5	4.7	5.5	6.5	4.2	C	40	9	1.0	0.002	1.5	38
TPZC6-5.4 OV	3.5	5.5	6.5	5.4	4.2	C	40	9	1.0	0.002	1.35	41
TPZC12-4	7.5	11.5	12.5	4.0	2.4	C	40	9	1.5	0.002	1.0	53
TPZC15-3.6	11.0	14.0	16.0	3.6	2.8	C	40	9	1.7	0.003	0.9	55
TPZC15D-1.8 (dual output)	11.5	14.5	15.5	1.8	1.5	C	60	9	1.3	0.004	0.45	53
TPZC24-2.5	16.0	22.0	26.0	2.5	1.8	C	40	9	1.7	0.008	0.63	57
TPZC28-2.4	20.0	26.0	30.0	2.4	1.8	C	40	9	1.8	0.008	0.60	53
TPZC48-1.7	32.0	46.0	52.0	1.7	0.8	C	40	9	1.4	0.020	0.43	58
TPZC60-1.4	50.0	57.0	63.0	1.4	1.1	C	40	9	1.4	0.04	0.35	58
TPZC100-.6	60.0	90.0	110.0	0.6	0.35	C	40	9	1.2	0.120	0.15	58
TPZC150-.35	110.0	140.0	160.0	0.35	0.28	C	40	9	1.1	0.3	0.09	58
TPZC200-.24	160.0	190.0	210.0	0.24	0.2	C	40	9	1.3	0.8	0.06	60
TPZD5-10 OV	2.5	4.7	5.5	10.0	7.0	D	40	11	2.1	0.001	2.25	38
TPZD6-8 OV	3.5	5.5	6.5	8.0	6.4	D	40	11	1.8	0.001	2.0	41
TPZD12-6	7.5	11.5	12.5	6.0	3.6	D	40	11	1.7	0.002	1.5	54
TPZD15-5.5	11.0	14.0	16.0	5.5	4.3	D	40	11	2.0	0.002	1.37	56
TPZD24-3.8	16.0	20.0	26.0	3.8	3.0	D	40	11	2.0	0.005	0.95	56
TPZD28-3.6	20.0	26.0	30.0	3.6	2.8	D	40	11	2.3	0.060	0.9	55
TPZE5-20 OV	2.5	4.7	5.5	20.0	12.5	E	40	20	3.6	0.001	4.25	39
TPZE6-16 OV	3.5	5.5	6.5	16.0	12.5	E	40	20	3.5	0.001	4.0	44
TPZE12-11	7.5	11.5	12.5	11.0	7.4	E	40	20	3.0	0.001	2.75	56
TPZE15-9.5	11.0	14.0	16.0	9.5	7.5	E	40	20	4.0	0.002	2.38	57
TPZE24-6.4	16.0	22.0	26.0	6.4	5.0	E	40	20	4.0	0.003	1.73	56
TPZE28-6	20.0	26.0	30.0	6.0	4.5	E	40	20	3.3	0.003	1.5	56

NOTES

1 0°C to +60°C (LVS and TPZA Series); 0°C to +40°C (TPZ Series). For higher operation, all units should be derated by 1%/°C to 60°C and 1.5%/°C from 60°C to 71°C.

2 Super Trypack modules are designed to deliver maximum current for most applications. For extended lower voltage applications, derate the output current in accordance with the typical curve and derating chart.

3 A = 3" x 3-9/16" x 6" D = 5" x 4-5/8" x 9-1/2"
B = 3-1/8" x 4" x 6-1/2" E = 5" x 8" x 10"
C = 3" x 4-5/8" x 9"

4 Nominal, in RMS Amps

5 Nominal, from DC to 1 kHz

6 10% load, minimum

7 Efficiency at 115V and nominal DC, full output current.

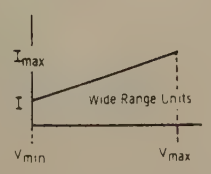

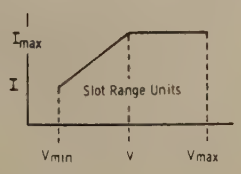

SECTION 2

INSTALLATION AND OPERATION

2.1 MECHANICAL INSTALLATION

The Super Trypack Series power supplies can be used in a rack or bench type configuration. For rack mounting, a variety of standard rack adapters are available, which will mount the Super Trypack, as well as, other Liberator Sub-Rack series power supplies, depending on desired application. All Rack Adapters contain integral slide mount provisions for rapid mounting of commonly specified centerline mounting, slide assemblies (in-line screw centers).

2.2 ELECTRICAL CONNECTIONS

Input Power

A barrier strip is provided for AC input connections to the unit.

The power handling ability of the AC power lines feeding AC power to the unit must be considered as serious losses in regulation and substantial increase in ripple may occur as a result of insufficient power capacity of these lines. All AC power line connections must be securely tightened and any movable electric contact surface (such as the wiper arm of a variable transformer) should be kept clear of impedance producing oxide coatings.

Care should be exercised in selecting the proper wire size for the AC input lines. The figures listed in Table 2-1 will serve as a guide in making this selection.

TABLE 2-1 AC INPUT WIRE SIZE

Length of Run (Single Lead)	Wire Size (AWG Standards)
10 feet or less	18
10 feet to 20 feet	16
20 feet to 50 feet	14
50 feet to 100 feet	12

Output, Rear Panel

A barrier strip provides sensing, DC output, remote voltage programming (RVP), AC inputs and ground connections.

2.3 OPERATING CONFIGURATIONS

The Super Trypack Series power supplies are designed to operate as highly regulated constant voltage sources with automatic foldback current limiting. There are various operating configurations that can be used by proper application of shorting links and wiring. The following paragraphs describe the various operating configurations and their connections.

Local Sensing

Local sensing connections are made when rated regulation is not required directly at a remote load. To adapt the power supply for local sensing, connect shorting links between -S and -V and between +S and +V terminals on the barrier strip. Connect the load between the -V and +V terminals of the barrier strip.

Remote Sensing

Remote sensing is used when rated regulation is required directly at the load. Remote sensing can compensate for load line wire losses up to 0.5 volts per leg. To adapt the power supply for remote sensing, remove shorting links from +S and +V and from -S and -V terminals of the barrier strip. Connect load to +V and -V. Using a twisted shielded pair of wires, connect +S and -S terminals to remote load as shown on Fig. 1.

Grounding

Either side of the output may be grounded, or the output may be used in a floating condition.

Power On

Connect the unit to an AC input power source. Power will be applied immediately.

Warm-Up

No warm-up time is necessary to place the unit into operation. However, a thirty minute warm-up period is recommended to reach rated stability. The unit is now ready for operation.

FIGURE 1

Remote Sensing

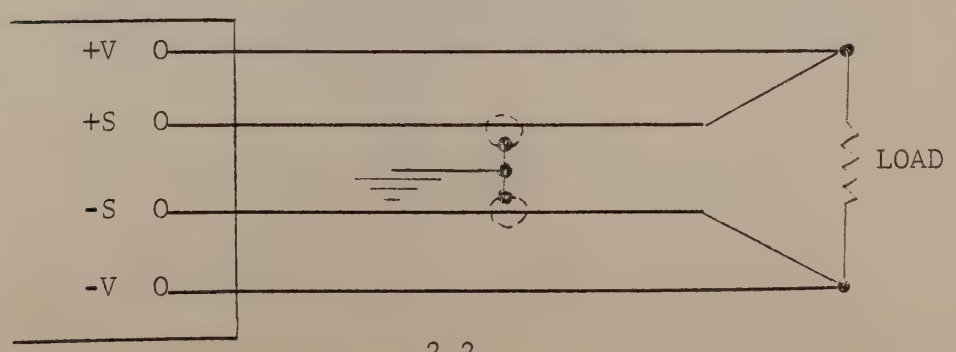

SECTION 3

THEORY OF OPERATION

3.1 GENERAL

The purpose of the Super Trypack power supply is to transform and recitfy the AC into a well regulated, stable and adjustable DC output. The following paragraphs describe the major circuits used in the power supply. As each circuit is described, reference should be made to both the Block Diagram, Feg. 2, and the Schematic Diagram in the rear of this manual.

Primary Input

Input power is obtained through a power transformer and diode rectifier sets. Each rectifier set provides the necessary DC voltages to the various power supply sub-sections.

Reference Supply

A highly stable voltage, regulated by a zener diode, provides for the reference voltage used in the error amplifier circuit.

Series Pass Network

Rectified DC power is directed through the series pass network. Conduction of this transistor is controlled by circuitry which causes it to act as a variable resistor. Its overall resistance varies in accordance with the need of the power supply to increase or decrease its output voltage and current.

Error Amplifier

The effor amplifier circuit compares the output of the power supply with a stable reference voltage. Any chazge in output voltage will cause an unbalance (error voltage) in the output of this circuit. This error voltage is amplified by the error amplifier and used to adjust the series pass to correct the unbalance in the comparator.

Overload and short circuit protection is provided for by the current sensing circuit, which limits the output current of the power supply, in the event that the output is overloaded or accidentally shorted.

Figure 2

Block Diagram

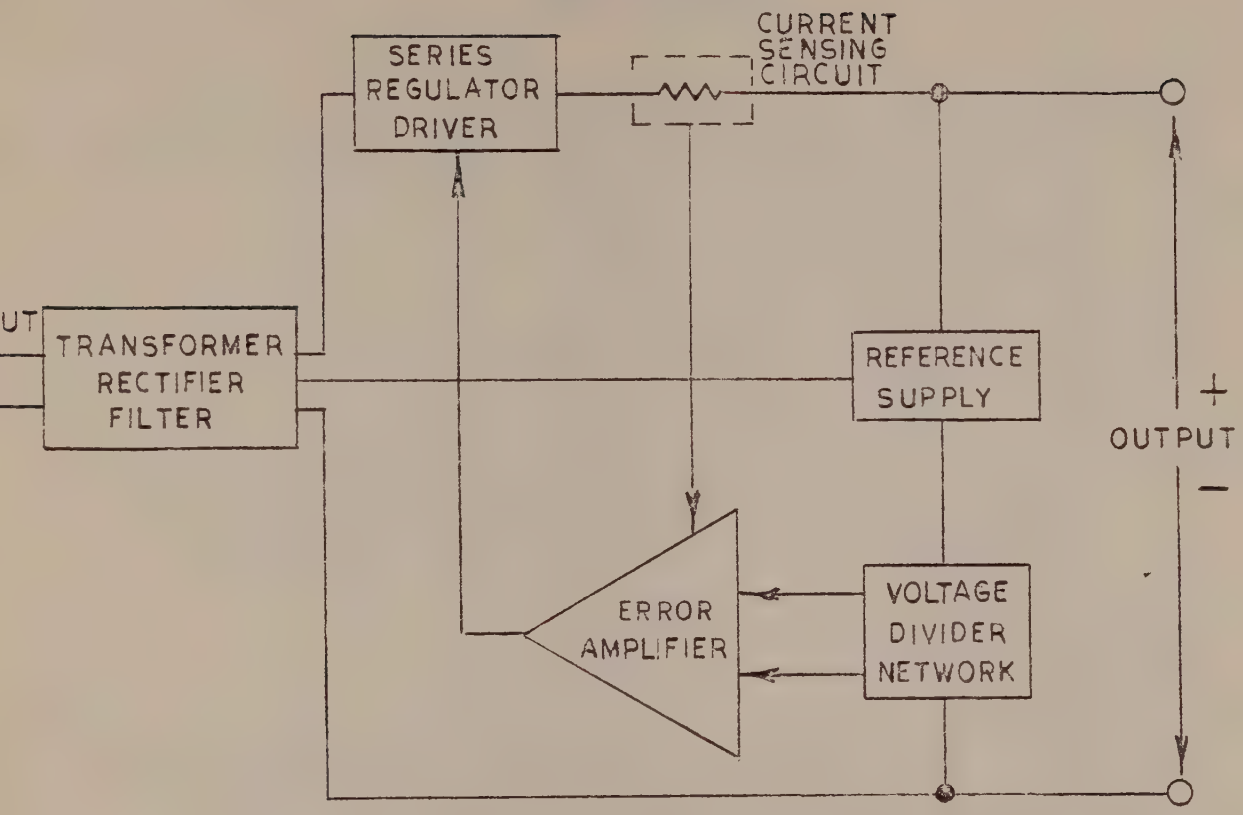

Figure 3

Performance Test Procedures

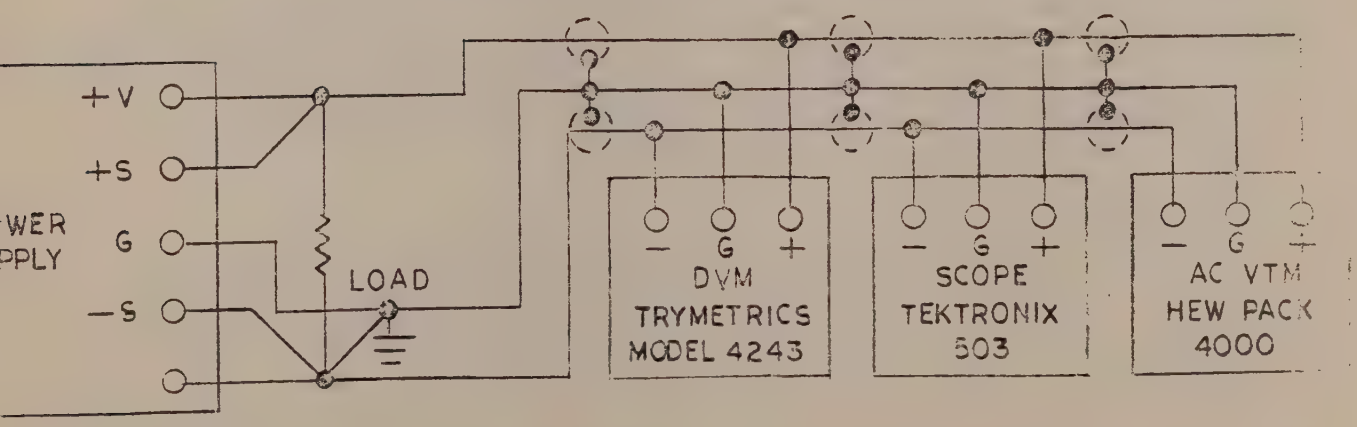

SECTION 4

CALIBRATION

4.1 GENERAL

The following tests should be made, when necessary, to assure optimum operating characteristics and maximum efficiency of the power supply.

4.2 TEST EQUIPMENT REQUIRED (or equivalent)

1) Oscilloscope, Tektronix Type 503
2) Digital Voltmeter, Trymetrics 4243
3) AC VTVM, Hewlett Packard Model 400D
4) Variable Auto Transformer, Superior 3PN136

NOTE: To reduce pick-up, shielded wire must be used for all connections between test equipment and the power supply being tested. To prevent ground loops, it is important that only one ground connection be made, as shown in Figure 3.

4.3 PERFORMANCE TESTS

Output Voltage Range

Apply nominal AC to input of power supply. Turn voltage adjust fully clockwise, record output voltage. Turn voltage adjust fully counter-clockwise, record output voltage and verify that unit is capable of covering the range in accordance with the specification sheet.

Load Regulation

With equipment connected, as shown in Figure 3, connect a suitable load resistance across the output terminals. The load selected must be able to dissipate the rated power of the unit P=EI, and must be of sufficient value to yield the rated output voltage indicated on the DVM. Disconnect the load from the output. The maximum change in output voltage indicated on the DVM should not exceed by more than the amount indicated on the specification sheet.

Line Regulation

With output voltage set at maximum rated output, connect load across output voltage terminals. Adjust load to draw maximum rated current. Vary the AC input voltage 10% above and below the nominal AC input level. The maximum change in output voltage should not exceed the amount indicated on the specification sheet.

Ripple Voltage

Repeat the above Line Regulation procedure. Read ripple voltage on AC VTVM. The maximum ripple amplitude should not exceed the amount on the specification sheet.

TPZC, TPWC, TPZD, TPZE AND TPWE OPERATING PARAMETERS

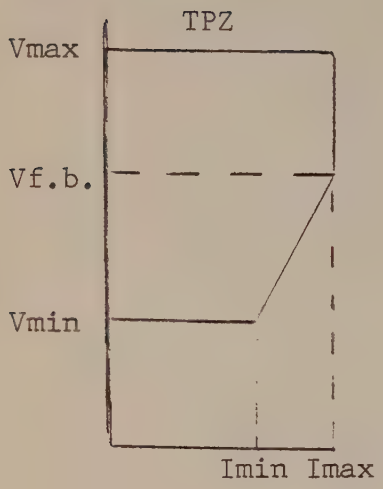

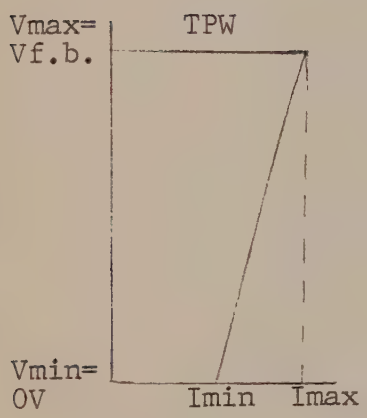

SERIES	MODEL	Vmax	Vf.b.	Vmin	Int. f.b. Adj.	Imax	Imin
TPZC	5-6.5 OV	5.5V	4.7V	2.5V	R 7	6.5A	5.0A
	6-5.4 OV	6.5V	5.5V	3.5V		5.4A	4.2A
	8-4.6	8.5	7.5V	4.7V		4.7A	3.7A
	12-4	12.5	11.5V	7.5V		4.0A	2.4A
	15-3.6	16V	14.0V	11V		3.6A	2.8A
	24-2.5	26V	22.0V	16V		2.5A	1.9A
	28-2.4	30V	26.0V	20V		2.4A	1.8A
	48-1.7	52V	46.0V	32V		1.7A	0.8A
	60-1.4	63V	60.5V	50V		1.4A	1.1A
	100-.6	110V	90V	60V		0.6A	0.35A
	150-.35	160V	140V	100V		0.35A	0.28A
	200-.24	210V	190V	160V		0.24A	0.2A
TPWC	12-3.3	12.5V		0 V		3.3A	1.6A
	50-1.2	50.0 V		0 V		1.2A	0.35A
TPZD	5-10 OV	5.5V	4.7V	2.5V	R13	10A	7A
	6-8 OV	6.5V	5.5V	3.5V		8A	6.4A
	8-7	8.5V	7.5V	5.5V		7A	5.5A
	12-6	12.5V	11.5V	7.5V		6A	3.6A
	15-5.5	16.0V	14.0V	11.0V		5.5A	4.3A
	24-3.8	26.0V	22.0V	20.0V		3.8A	3.0A
	28-3.6	30.0V	26.0V	20.0V		3.6A	2.8A
	48-2.5	52.0V	46.0V	32.0V		2.5A	1.2A
TPZE	5-20 OV	5.5V	4.7V	2.5V	R15	20A	12.5A
	6-16 OV	6.5V	5.5V	3.5V		16A	12.5A
	8-13	8.5V	7.5V	5.5V		13A	11.5A
	12-11	12.5V	11.5V	7.5V		11A	7.6A
	15-9.5	16.0V	14.0V	11.0V		9.5A	7.5A
	18-8.5	19.0V	17.0V	15.0V		8.5A	7.5A
	24-6.4	26.0V	22.0V	16.0V		6.4A	5.0A
	28-6	30.0V	26.0V	20.0V		6.0A	4.5A
	48-4	52.0V	46.0V	32.0V		4.0A	2.0A
	60-3.3	63.0V	57.0V	50.0V		3.3	2.6A
	100-1.8	110V	90.0V	60.0V		1.8A	1.15A
	150-1.3	160V	140V	110V		1.3A	0.95A
	200-.75	210V	190V	160V		0.75A	0.55A
TPWE	12-9	12.5		0 V	R15	9A	4.5A
	50-3.2	50.0 V		0 V		3.2A	1.0A

Current Limit Foldback

1) Set voltage adjust control to V(f.b.), (foldback voltage).
2) Apply a load of sufficient size to cause the unit to operate at 106% of I max.
3) Slowly rotate R(f.b.), (foldback control pot) until the output voltage starts to decrease.
4) Back off foldback control until the output voltage returns to initial setting.

Current Limit Foldback (continued)

5) Increase the load to short circuit condition. Observe that the current folds back, indicating proper operation of the foldback current limiting circuit.

SECTION 5

OVS SERIES, OVERVOLTAGE PROTECTION MODULES

Trygon overvoltage modules are specifically designed for use in application requiring the ultimate protection of sensitive circuits. These modules prevent damage to the load, caused by excessive power supply output voltage due to improper adjustment, improper connection or failure of the power supply. After the OV fires, it can be reset by removal of power. The modules are designed for convenient customer installation on all Trygon Super Trypack models.

Installation and Adjustment

Installation

To mount the OVS module on the power supply, proceed as follows:

1. Position the OVS on the rear panel of the power supply above the barrier strip (as illustrated on spec. sheet).

2. Secure the OVS to power supply with the two (2) 6-32 captive screws.

3. Connect the red lead from the OVS to +V output terminal and black lead to -V terminal.

Adjustment

1. Using a screwdriver, turn the voltage adjust control on the OVS module fully clockwise.

2. Adjust the power supply output to the desired firing point voltage.

3. Slowly turn the OVS voltage adjust counter-clockwise until the power supply output voltage drops to almost zero.

4. Set power supply voltage to minimum. Reset OVS by turning the power supply off and then on again.

5. Set power supply output to the desired operating voltage.

NOTE: If desired firing point voltage is beyond the range of the power supply, it will be necessary to use another power supply which will cover the required voltage range. Warning: Current rating of OVS must be observed and the additional power supply must be current limiting or foldback protected.

TERMINAL STRIP DESIGNATION

MODEL	#1	#2	#3	#4	#5	#6	#7	#8	#9	#10	#11	#12	#13
TPZC	AC	AC	G	-V	-S	RVP	+S	+V	*	*	*	*	*
TPWC	AC	AC	G	-V	-S	RVP	+S	+V	*	*	*	*	*
TPZD	AC	AC	G	+V	+S	RVP	-S	-V	*	*	*	*	*
TPZE	AC	AC	G	**	+V	+V	+S	RVP	-S	-V	-V	**	**
TPWE	AC	AC	G	**	+V	+V	+S	RVP	-S	-V	-V	**	**

* TERMINALS NOT ON UNIT

** TERMINALS ON UNIT BUT NOT UTILIZED

REMOTE VOLTAGE PROGRAMMING (with Resistance)

Remove link between RVP and -S terminals. Insert resistance being used to program between these two terminals.

Programming factor: 500 ohms/volt. External resistance to be value required above minimum internal voltage adjust setting.

*- INDICATES DEVIATION FROM STANDARD TPZC15-3.6-0V

ITEM NO.	SIZE	PART NUMBER	DESCRIPTION	REFERENCE NO.	ASSY QTY	ACT. CODE	ISS. QTY	SHT QTY
1		065102	SHIPPING ASS'Y		X	X		
3	A	PD22486	TOP COVER ASS'Y		1	2		
4	B	065183	TOP COVER		1	2		
5		T981040	SPEED NUTS		2	R		
6	B	T105580	VOLT ADJ. LABEL		1	1		
7	E	124200	SCHEMATIC		1	R		
8	A	1278	SPECIAL TEST DATA		1	R		
10	A	PD27469	CHASSIS ASS'Y #1		1	2		
11	B	T105574	CHASSIS		1	2		
12		850085	BARRIER STRIP		1	1		
13		840097	CAPACITOR CLIP		1	1		
14		T981037	SPEED NUTS		6	1		
15		840217	BARRIER STRIP LINKS		3	1		
16	A	PD27427	BARRIER STRIP WIRING		R	R		
17		810117	CAPACITOR 91 MF-40V	C103	1	1		
18		610296	RESISTOR 1.5K-2W-10%	R101	1	1		
*- 19	E	123882	TERM. BD. MTG. BKT		1	2		
*- 20		850064	BARRIER STRIP		1	1		
22	A	PD27420	CHASSIS TOP ASS'Y		1	2		
*- 23	A	504292	TRANSFORMER		1	2		
24		981041	SPEED NUTS		4	R		
27	A	PD22485	CHASSIS FINAL ASS'Y		1	2		
28		820366	CAPACITOR 2,000MF-35V	C1	1	1		
29	B	T100712	CAPACITOR BKT		1	2		
30		981037	SPEED NUTS		4	R		
31	B	T101040	NAME-PLATE		1	R		

MODEL	JOB NO.	LOT QTY	LOT NO.	CODE IDENT
				52542

PLANNER | PREP | DATE | SYSTRON DONNER CORPORATION

CHK'D

MAT. DUE | APP'D

S/U REQ.

S/U COMP

USED ON

SHIPPING ASS'Y
TPZC15-2.5-0V.
S6501

DRAWING NO.

REF	SIZE	PART NO.	REV
—	P	065102	

SHEET 1 OF 4

REVISIONS DESCRIPTION

REV

FORM EB-A 11 JUL 75

FSCM NO. 52542

ITEM NO.	SIZE	PART NUMBER	DESCRIPTION	REFERENCE NO.	ASSY QTY	ACT. CODE	ISS. QTY	SHT QTY
34	A	PD22486	HEAT-SINK ASS'Y		1	2		
35	C	T100682	HEAT-SINK		1	2		
36		705071	TRANSISTORS 2N3447	Q101 Q102	2	1		
37		720129	DIODES 12AMP 50V	CR101 102	2	1		
38		880007	THERMAL SWITCH	S101	1	1		
39		800090	CAP. .01MF-600V	C101 C102	2	1		
40		830101	TRANSISTOR SOCKET		2	1		
41	A	PD22678	HEAT-SINK WIRING		R	R		
47	C	PD22467	P.C. BOARD ASS'Y WITH O.V.		1	2		
48	C	T105896	P.C. BOARD		1	2		
49	C	T105902	HEAT-SINK		1	2		
51		600049	POT 100Ω .25W	R7	1	1		
52		600287	15K .5W	R30	1	1		
53		610000	RESISTOR 10Ω 1/2W	R28	1	1		
54		610019	2.7Ω 1/4W	R2	1	1		
55		610020	33Ω 1/2W	R14	1	1		
56		610041	68Ω 1/4W	R10	1	1		
57		610139	470Ω 1/4W	R3	1	1		
58		610150	560Ω 1/2W	R15	1	1		
59		610149	560Ω 1/4W	R16	1	1		
60		610189	1.2KΩ 1/4W	R23	1	1		
61		610203	1.8KΩ 1/4W	R9	1	1		
62		610182	2.2K 2W	R1	1	1		
63		610229	3.3K 1/4W	R11	1	1		
64		610247	4.7K 1/4W	R21	1	1		
65		610261	5.6K 1/4W	R22	1	1		
66		610270	6.8K 1/2W	R24	1	1		

MODEL	JOB NO.	LOT QTY	LOT NO.	CODE IDENT
				52542

PLANNER | PREP DATE | CHK'D | APP'D | MAT. DUE | S/U REQ. | S/U COMP | USED ON

SYSTRON DONNER CORPORATION

SHIPPING ASS'Y
TPEC 15-2-0V
S6501

DRAWING NO.

REF	SIZE	PART NO.	REV
—	P	065602	

SHEET 2 OF 4

REVISIONS DESCRIPTION

REV

FORM E8—A 11 JUL 75

*-INDICATES DEVIATION FROM STANDARD TPZC15-3.6-0V

ITEM NO.	SIZE	PART NUMBER	DESCRIPTION	REFERENCE NO.	ASSY QTY	ACT. CODE	ISS. QTY	SHT QTY
67			P.C. BOARD ASS'Y (CONT.)					
69		610299	RESISTOR 15K 1/4W	R17	1	1		
70		620143	412Ω 1/2W	R20	1	1		
71		620161	475Ω 1/4W	R18	1	1		
72		620265	649Ω 1/4W	R5 R6	2	1		
73		620482	3.09K 1/4W	R26	1	1		
74		620576	5.11K 1/4W	R8	1	1		
75		620577	5.23K 1/2W	R31	1	1		
* 76		620686	32.4K 1/2W	R19	1	1		
77		620616	10.2K 1/2W	R32	1	1		
78		620751	75K 1/4W	R25	1	1		
79		630019	.5Ω 5W 3%	R12 R13	2	1		
80		101625	470Ω 1/4W	R27	1	1		
82		700002	TRANSISTOR 2N3633A	Q2	1	1		
83		700182	2N3566	Q3, Q5, Q6, 7	4	1		
84		700191	TR1591	Q1	1	1		
85		705067	2N2905A	Q4	1	1		
88		720181	DIODE ZENER 1N751A	CR6 CR7	2	1		
89		720384	1N4384	CR1 CR2	4	1		
90				CR11 CR12				
91		720440	TR4148	CR9 CR15	2	1		
92		720453	MR1030A	CR5	1	1		
93		720473	1N821	CR8	1	1		
95		800018	CAPACITOR 330PF-600V	C9	1	1		
96		800090	.01MF-600V	C4 C5 C8	3	1		
97		800285	.047MF-250V	C11	1	1		
98		810166	230 MF-30V	C10	1	1		
99		106515	5.6 MF-20V	C7	1	1		

REVISIONS DESCRIPTION

REV

MODEL	JOB NO.	LOT QTY	LOT NO.	CODE IDENT
				52542

PLANNER | PREP | DATE | SYSTRON DONNER CORPORATION

CHK'D

MAT. DUE | APP'D

SHIPPING ASS'Y TPZC15-2.5-0V S6501

B/U REQ.

DRAWING NO.

REF	SIZE	PART NO.	REV
—	P	065[illegible]	

B/U COMP

USED ON

SHEET 3 OF 4

FORM EB-A 11 JUL 75

ITEM NO.	SIZE	PART NUMBER	DESCRIPTION	REFERENCE NO.	ASSY QTY	ACT. CODE	ISS. QTY	SHT QTY
100			P.C. BOARD ASS'Y (CONT.)					
102		821019	CAPACITOR 68MF-6V	C13 C14	2	1		
104		870190	FUSE 5 AMP 125V	F1	1	1		
105		102746	FUSE CLIP		2	1		
106		PD27415	HARNESS LIST		1	2		
108		PD27422	H.S. JUMPER LIST		1	2		
112			P.C. BD.-OV. PARTS	PD27417	R	R		
113		610142	RESISTOR 270Ω 1/4W	R39	1	1		
114		610179	1KΩ 1/4W	R35 R37	2	1		
115		610247	4.7K 1/4W	R36	1	1		
116		610289	10K 1/4W	R34	1	1		
117		620578	5.62K 1/4W	R33	1	1		
118		620674	8.66K 1/2W	R38	1	1		
119		700002	TRANSISTOR 2N3638A	Q9	1	1		
120		700182	" 2N3566	Q10	1	1		
121		720440	DIODE TR4148	CR13	1	1		
122		725087	" MCR2918	CR14	1	1		
123		800168	CAPACITOR .05MF-200V	C12	1	1		
127A		PD22484	P.C. BOARD WIRING		1	R		

MODEL	JOB NO.	LOT QTY	LOT NO.	CODE IDENT 52542
PLANNER	PREP DATE	SYSTRON DONNER CORPORATION		
	CHK'D	SHIPPING ASS'Y		
MAT. DUE	APP'D	TPZC 15-2-DV01		
B/U REQ.		S6501		
		DRAWING NO.		
B/U COMP		REF — SIZE P PART NO. 065602 REV		
	USED ON	SHEET 4 OF 4		

REVISIONS DESCRIPTION

REV

FORM E8-A 11 JUL 75

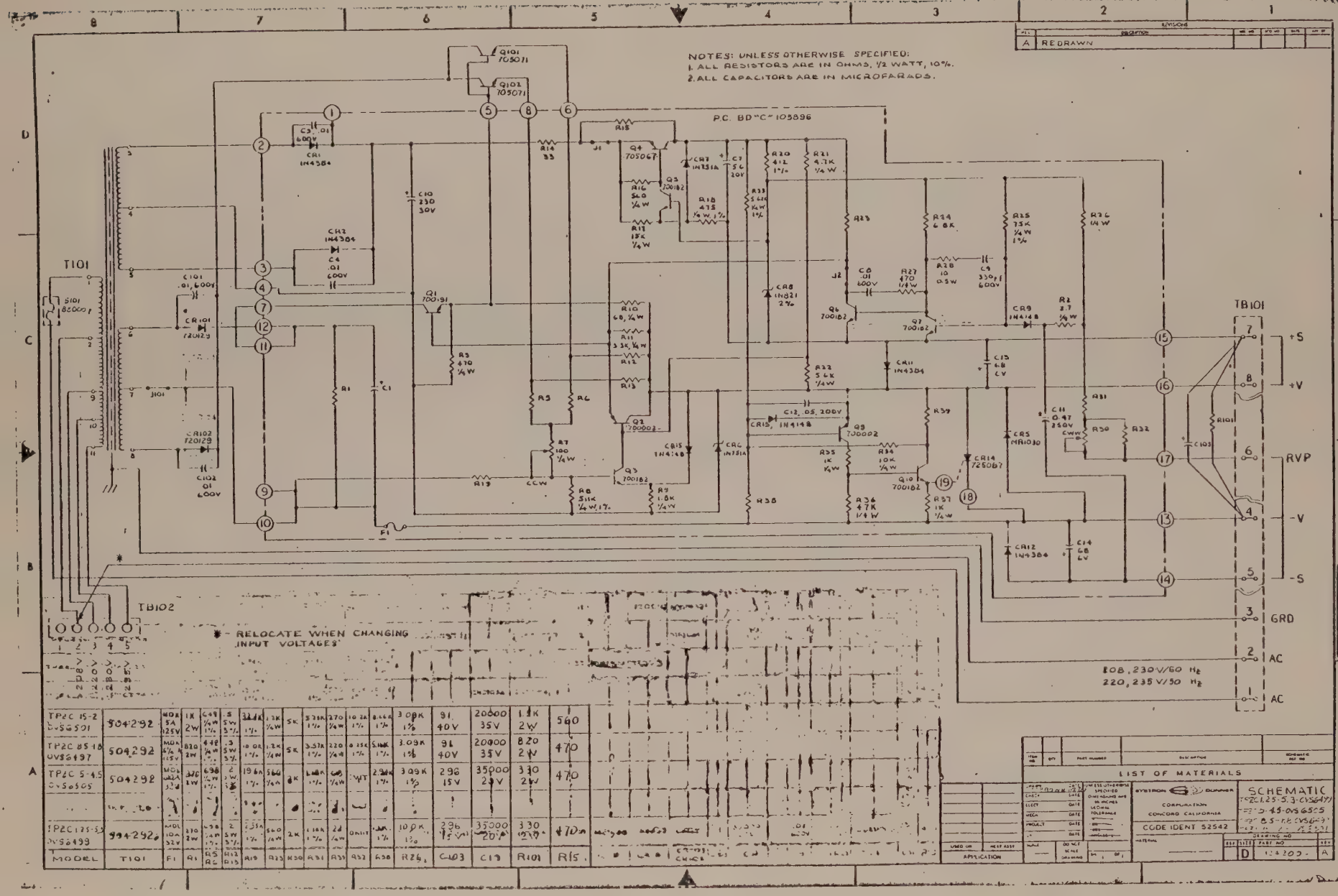
NOTES: UNLESS OTHERWISE SPECIFIED:
1. ALL RESISTORS ARE IN OHMS, 1/2 WATT, 10%.
2. ALL CAPACITORS ARE IN MICROFARADS.
P.C. BD "C" 105896
T101
TB101
TB102
+S
+V
RVP
-V
-S
GRD
AC
AC
* - RELOCATE WHEN CHANGING INPUT VOLTAGES
208, 230V/60 Hz
220, 235V/50 Hz
REDRAWN
LIST OF MATERIALS
SCHEMATIC
CODE IDENT 52542
CORPORATION
CONCORD CALIFORNIA

INSTRUCTION MANUAL

MODEL VPH5.2-30 MOVS6489

Copyright © 1980 Systron-Donner

SYSTRON DONNER
A MEMBER OF THE THORN EMI GROUP

CONCORD INSTRUMENT DIVISION
2727 Systron Drive • Concord, California 94518 • U.S.A.
Tel: (415) 676-5000 • TWX: 910-481-9479 • Cable: SYSTRONDONNER

FSCM No. 52542

Printed in U.S.A.

INSTRUCTION MANUAL

This manual describes the VPH ValuPower Half Rack Series Power Supplies. It contains information of the following:

Model VPH5-60M OV
Model VPH12-35M OV
Model VPH15-31M OV

Model VPH24-22M OV
Model VPH 28-19M OV

Model VPHD15-13M OV

VPH SERIES
VALUPOWER HALF RACK POWER SUPPLIES

MODEL NO.

Copyright © 1975 Systron-Donner Corporation

SYSTRON DONNER CORPORATION

CONCORD INSTRUMENT DIVISION
10 Systron Drive • Concord, California 94518 • U.S.A.
Tel: (415) 676-5000 • TWX: 910-481-9479 • Cable: SYSTRONDONNER

FSCM No. 52542

SYSTRON DONNER
Member THORN EMI Group

TEST & MEASUREMENT GROUP OF SYSTRON DONNER WARRANTY POLICY

I Warranty

The Test & Measurement Group of Systron Donner warrants that at the time of shipment the products manufactured by Systron Donner's T & M Group and sold hereunder will be free from defects in material and workmanship and will conform to the specifications furnished by or approved in writing by Systron Donner's T & M Group.

II Warranty

A **The warranty period for products published in our latest product catalog will be one year from the date of shipment. This warranty is extended only to the original buyer.**

B The warranty period for products published in prior catalog, will be 90 days from the date of shipment.

C The warranty period for modified standard products, custom products, or new spare part assemblies will be 90 days from the date of shipment.

D The warranty period for systems or assemblies of miscellaneous components and products will be limited to the warranty for the stand alone component or instrument. The system itself is not guaranteed unless a specific installation and service agreement has been negotiated between Systron Donner and the customer. In this latter case, the warranty period will be 30 days after the installation of the system while the various portions of the system will be limited to the normal component or instrument stand alone warranty, and for non Systron Donner material within the system that is furnished by Systron Donner the warranty will be limited to the supplier's normal warranty.

III Warranty Adjustments

A If any defect within this warranty appears, Purchaser shall notify Seller immediately.

B Systron Donner's T & M Group agrees to repair or furnish a replacement for, but not install, any product which, within the standard warranty shall, upon test and examination by Systron Donner's T & M Group, prove defective within the above warranty period.

C No product will be accepted for return or replacement without the written authorization of Systron Donner's T & M Group. Upon such authorization and in accordance with instructions by Systron Donner's T & M Group, the product will be returned to the original manufacturing location, shipping charges prepaid by Purchaser.

IV Exclusions from Warranty

A The foregoing warranty is in lieu of and excludes all other expressed or implied warranties of merchantability or fitness or otherwise

B Systron Donner's T & M Group will not be liable for any special or consequential damages or for loss, damages or expense directly or indirectly arising from the use of the products, or any inability to use them either separately or in combination with any other equipment or material, or from any other cause.

C The warranty does not extend to any product manufactured by Systron Donner's T & M Group which has been subjected to misuse, neglect, accident, improper installation or to use in violation of instructions furnished by Systron Donner's T & M Group.

D The warranty does not extend to or apply to any unit which has been repaired or altered at any place other than at a Systron Donner T & M Group factory, by persons not expressly approved by Systron Donner's T & M Group, not to any unit, the serial number of which has been removed or defaced or changed.

E This warranty applies to new equipment only and will cover repaired or replacement items only to the extent of the balance remaining of the items original warranty period noted above in Paragraph II.

F All freight charges will be paid for by the Purchaser.

Divisions in the Test & Measurement Group include:
Instrument Division — Concord, CA
ACD Division — Sunnyvale, CA
SD GmbH — Munich, West Germany

January 1982

SYSTRON DONNER
Member THORN EMI Group

INSTRUMENT
DIVISION

2727 Systron Drive, Concord, CA 94518
Phone (415) 676-5000
TWX 910-481-9479

PROPRIETARY RIGHTS STATEMENT

The design information contained herein is the sole property of Systron Donner. The disclosure of this information does not constitute the release of proprietary rights thereof, but is to be used for informational purposes only. Permission to reproduce this information of the product described herein must be obtained in writing from Systron Donner.

Copyright © 1982 Systron Donner
Printed in U.S.A.

TABLE OF CONTENTS

SECTION			PAGE
1	DESCRIPTION		
	1.1	Introduction	1-1
	1.2	Description	1-1
	1.3	General Features	1-1
	1.3.1	Constant Voltage Model	1-2
	1.3.2	Automatic Foldback Current Limiting	1-2
	1.3.3	Remote Programming	1-2
	1.3.4	Adjustable Overvoltage Protection	1-2
	1.4	Precautionary Measures	1-2
	1.4.1	Wire Size	1-2
	1.4.2	Terminal Post Resistance	1-2
	1.5	Specifications	1-3
2	INSTALLATION AND OPERATION		
	2.1	Mechanical Installation	2-1
	2.2	Electrical Connections	2-1
	2.3	Operating Configurations	2-1
	2.4	Controls	2-2
	2.5	Operation	2-4
3	THEORY OF OPERATION		
	3.1	General	3-1
4	CALIBRATION AND MAINTENANCE		
	4.1	General	4-1
	4.2	Test Equipment Required	4-1
	4.3	Calibration Procedure	4-1
	4.4	Maintenance	4-3

LIST OF FIGURES

Figure	2-1	Local Programming/Local Sensing	2-3
	2-2	Remote Programming	2-3
	2-3	Remote Sensing	2-3
	3-1	Block Diagram	3-2
	4-1	Test Equipment Set-up	4-4

LIST OF TABLES

Table	1-1	Specifications	1-3

SECTION I
DESCRIPTION

1.1 INTRODUCTION

The ValuPower Half Rack (VPH) Series Power Supplies are flexible and dependable sources of DC power, which can be used to meet a variety of needs. These needs may range in scope from inspection and production testing, to laboratory bench testing, IC and system applications.

The voltage adjustment range makes these units well suited for specific systems applications. The ability to provide power packaged in minimum space with high reliability and performance meets the demands of most systems requirements.

This instruction manual provides general characteristics and specifications, operating procedures, theory of operation, calibration and maintenance, parts lists and related schematics for the ValuPower Half Rack series Power Supplies Models, VPH5-60M OV, VPH12-35M OV, VPH15-31M OV, VPH24-22M OV, VPH28-19M OV and VPHD15-13M OV.

1.2 DESCRIPTION

The VPH Series is a unique innovation in DC power supply technology. It provides high power output with excellent regulation, low ripple, fast response and low output impedance for powering and protecting sensitive IC's and systems.

The VPH Series units are available in five slot range outputs and one dual output model (VPHD15-13M OV) providing ±11.5 to 15.5 Vdc at 13 amps. All units are half rack, 5-1/4" high for bench or rack mounting with suitable adapters.

This series is multi-versatile for use in either multiple output power systems or in lab applications with optional meters and controls.

For multiple output power applications, the VPH Series is compatible with Trygon's RM521 and RAH-2B rack adapters. These rack confiugrations afford the user the opportunity to mix and match smaller units with different ratings providing a complete system power supply with multiple outputs for various power requirements.

1.3 GENERAL FEATURES

This series features UL Design, low noise for IC and Systems applications, extremely low output impedance, unique self-test output indicator lamp, adjustable current limiting, remote sensing and programming, overvoltage protection, no turn on/turn off transients, positive convection cooling and versatile rack and bench mounting capability for multiple output power. Output, sensing and remote programming terminals are located on the rear panel of the unit. The AC power switch, DC "ON" lamp, voltage control, and appropriate optional metering devices are all located on the front panel.

1.3.1 Constant Voltage Model

A constant voltage is maintained across the output terminals at any preset value within the rated slot voltage range, provided that the load does not draw more than either the rated output current or more than the preset limiting current value determined by the top recessed current control setting.

1.3.2 Automatic Foldback Current Limiting

Short circuit protection is provided by the automatic current limiting circuit which limits the maximum output current under all load conditions. The point at which automatic current limiting occurs is variable and may be selected anywhere between 40% of the rated output current and maximum rated output current of the unit. In the event of an overload, the current and voltage foldback into a safe operating region. In the event of a short circuit, the output current is limited to approximately 40% of the rated current.

1.3.3 Remote Programming

Remote Programming is provided in the voltage mode of operation and may be utilized over the entire voltage range of the unit. The scale factor for remote voltage programming is approximately 500 ohms per volt.

1.3.4 Adjustable Overvoltage Protection

Adjustable overvoltage protection (OV) has a special circuitry which prevents the output from exceeding a preset voltage. An external adjustment control recessed in the top cover is provided to vary the point at which the OV circuit will activate. The overvoltage crowbar will latch when an overvoltage condition occurs and must be reset by cycling the AC input power off and on again. The OV protection point should not be set lower than 1 volt above the minimum power supply voltage rating or 5.5 V minimum.

1.4 PRECAUTIONARY MEASURES

1.4.1 Wire Size

To assure proper regulation under all load conditions and to prevent severe distortions of the AC line voltage, it is very important to take into consideration the physical size and current handling capabilities of the input power line. Serious losses in regulation and an increase in ripple may result from underrated or overloaded AC input lines. The maximum AC impedance from the breaker box to the power supply should not exceed 0.5 ohms.

1.4.2 Terminal Post Resistance

All terminals and shorting links serving outputs, sensing and programming must be securely tightened before use. Serious loss of regulation and an increase in ripple can result due to a voltage drop caused by loose terminals and shorting links.

The specifications cited herein for regulation and ripple can be readily attained on every power supply providing the proper method of measurement is employed. The major consideration is that the highly stable meter and oscilloscope, specified in the calibration procedures, must be connected to the sensing terminals and not the load terminals. The reason for this precaution is that the voltage drop between the load terminals and sensing terminals will yeild an inaccurate regulation ripple measurement.

1.5 SPECIFICATIONS

Table 1-1 is a complete list of standard specifications for the ValuPower Half Rack Power Supplies.

TABLE 1-1 SPECIFICATIONS

ELECTRICAL SPECIFICATIONS

Input:	105-132 Vac[1], 57-65 Hz. (200-250 Vac, 47-65 Hz option available)[2].
Output:	Floating; Isolated from ground, 300 Vdc maximum. Internal protection is provided for applied reverse voltage.
Regulation Line:	0.02% for 105-132 Vac line change.
Regulation Load:	0.02% or 5 mV* for no load to full load.
Ripple:	Less than 1 mV RMS; total ripple and noise less than 5 mV p-p +0.05%(to 10 MHz).
Stability:	0.05% +10 mV, for 8 hours after 30 minutes warm-up. Measured at constant line, load and ambient temperature.
Temperature Coefficient (Per°C):	0.02%/°C.
Temperature Range:	-20°C to +71°C.
Temperature Storage:	-55°C to +85°C.
Recovery Time:	50 microseconds to within 30 mV for a Δ1 change as shown in the table.
High Stability (X Option):	0.03%/8 hours. 0.1%/1000 hours. TC 0.01%/°C.
Overload Protection:	A unique patented automatic non-linear current foldback system is incorporated in these units. It is adjustable from 40% to 100% of rated load and affords maximum protection of the series pass regulator while providing maximum reliability should an overload condition occur. (A minimum short circuit current of 10% will be delivered into any class of load, ensuring proper operation with most non-linear loads).

TABLE 1-1 SPECIFICATIONS (Cont'd)

ELECTRICAL SPECIFICATIONS (Cont'd)	
AC Power Input Protection:	Rear panel mounted fuse.
Remote Programming:	Programmable over rated voltage range. Scale factor approximately 500 ohms/volt.
Remote Sensing:	Maintains rated regulation directly at the load. Maximum line drop 0.5 V per leg is included in voltage range. Internal protection is supplied for open sensing leads.
Voltage Adjustment Range:	Continuously adjustable over rated voltage range. Resolution and settability 0.1%.
UL Approval:	Designed to meet UL Recognized Component Index requirement.
GENERAL & PHYSICAL SPECIFICATIONS	
Design Principle:	Prescision Series Pass Regulation.
Operational Modes:	Constant Voltage with Automatic Current Foldback Protection.
Controls:	
Voltage:	Continuous voltage adjustment, front panel screwdriver locking adjust.
Current:	Top recessed adjustment, 40% to 100%.
Input Power:	Front panel AC ON switch (optional)[3].
Output Power:	Front panel DC output indicator.
OV Adjust:	Top recessed adjustment potentiometer.
Metering (Option)[3]:	
Voltage:	Front panel Voltmeter (meter accuracy ±2%).
Current:	Front panel ammeter (meter accuracy ±2%).
Rear Panel Power Output Terminals:	(TB-3) 1/4-20 heavy duty terminals for +V and -V.
Rear Panel Barrier Strip:	(TB-1) (1) AC; (2) Ground G; (3) AC. (TB (TB-4) (1) Negative Output -V; (2) Negative Sensing -S; (3) Remote Voltage Programming RVP: (4) Positive Sensing +S; (5) Positive Output +V.
Systems Rack Mounting Capability:	VPH units without meters can be mounted in Rack Models RPS-8B, RAH-2B or RQH-3B racks for multiple output power are used where meter option is requested. Rack Model RM521 is used for multiple output systems applications where meters and controls are required, external to the unit.

TABLE 1-1 SPECIFICATIONS (Cont'd)

GENERAL & PHYSICAL SPECIFICATIONS (Cont'd)

Overvoltage Protection:	Automatic fast acting, adjustable overvoltage protection available with recessed adjustment.
Dimensions:	5-1/4" x 7-3/4" x 16-1/4".
Weight:	40 lbs.

NOTES: [1]Derate output current 15% for operation above 125 Vac (or 238 Vac).
[2]Derate current 10% or temperature 10 C. Multiply ripply by 2x factor.
[3]When meter option (suffix M) is ordered, unit is provided with four rubber mounting feet for bench use, AC switch and DC output indicator as well as voltage and current meters.

Model	Volts	Max. Amps at Ambient of: 40°C	60°C	71°C	Nominal AC Line Current Rms Amps	Nominal Impedance DC-1 KHz Ohms	Recovery ΔI Amps	Eff* (%)
VPH 5-60 OV**	4.75 to 5.5	60	45	35	8	0.0005	15	40
VPH 12-35	11.0 to 13.0	35	24	20	9	0.001	12	50
VPH 15-31	14.0 to 16.0	31	21	18	9	0.001	10	55
VPH 24-22	23.0 to 26.0	22	15	13	10	0.001	8	57
VPH 28-19	26.0 to 30.0	19	13	11	10	0.001	6	57
VPHD 15-13 (Dual)	±11.5 to 15.5	13	9	7.5	7.5	0.001	4	51

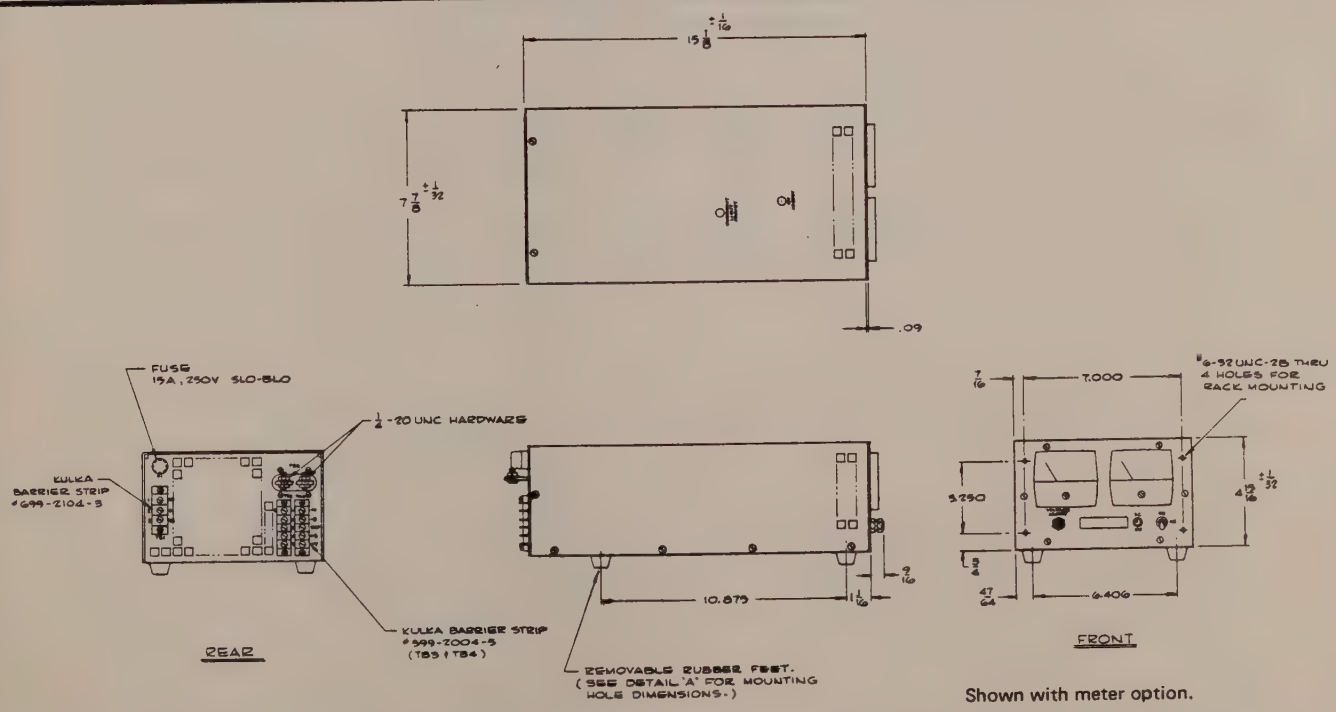

Shown with meter option.

SECTION 2

INSTALLATION AND OPERATION

2.1 MECHANICAL INSTALLATION

When the ValuPower Half Rack series power supply is to be used in a rack configuration, rack adapter RAH-2B may be used for either metered or unmetered models. The RAH-2B will accommodate two VPH units side by side. Rack model RM521 can accommodate VPH units intermixed with other modules as well.

For rack mounting, the four rubber feet are removed before placing unit into the rack adapter. The rubber feet provided on all units allow the power supply to be used as a bench supply.

2.2 ELECTRICAL CONNECTIONS

Input Power

A three-terminal barrier strip mounted on the rear panel provides AC input connections to the unit.

The power handling ability of the AC power lines feeding AC power to the unit must be considered, as serious losses in regulation and substantial increase in ripple may occur as a result of insufficient power capacity of these lines. All AC power line connections must be securely tightened and any movable electric contact surface (such as the wiper arm of a variable transformer) should be kept clear of impedance producing oxide coatings.

Care should be exercised in selecting the proper wire size for the AC input lines. The AC wire size should be sufficient so that the line drop does not exceed a value which will allow the input voltage to drop below the specified lower limit of 105 VAC.

An AWG #16 should be adequate for most short runs of 20 ft. or less. Increase wire size to #14 for up to 50 feet and to #12 for up to 100 feet.

Output, Rear Panel

On single output VPH units, main output is provided on two heavy duty terminals. A second auxilliary terminal block is provided for remote sensing and remote programming.

On dual output VPHD units, the negative output, negative remote sensing and remote programming is provided on one terminal block, with positive output, positive remote sensing, and common voltage return and common remote sensing provided on a second terminal block.

2.3 OPERATING CONFIGURATIONS

The ValuPower series power supplies are designed to operate as highly regulated constant voltage sources with automatic fold-back current limiting. There are various operating configurations that can be used by proper application of shorting links

2.3 Continued

and wiring. The following paragraphs describe the various operating configurations and their connections.

Local Voltage Programming (Fig. 2-1)

To adjust the output voltage from the power supply, connect a shorting link across terminals 2 and 3. With this shorting link installed, the voltage adjust control provides adjustment of the output over the rated slot voltage range.

Remote Voltage Programming (Fig. 2-2)

Remote voltage programming is achieved by removing the shorting link from terminals 2 and 3 and substituting a resistive element of proper value across terminals 2 and 3 external to the power supply.

Sensing Connections

Local Sensing (Fig. 2-1)

Local sensing connections are made when rated regulation is not required directly at a remote load.

Connect the load to output studs +V and -V, and ascertain that shorting links are connected between terminals 1 and 2 and 4 and 5.

Remote Sensing (Fig. 2-3)

Remote sensing is used when rated regulation is required at a remote load.

Remove the shorting links between terminals 1 and 2 and 4 and 5. Using a twisted, shielded pair of wires, connect the -S (2) and +S (4) sensing terminals to the load. To prevent damage to the power supply, correct polarity of both the remote sensing and output leads must be observed. The negative remote sensing lead (-S) and negative output lead (-V) must be connected to one side of the load and the positive remote sensing lead (+S) and positive output lead (+V) connected to the other side of the load. The shield should be grounded at the power supply end of the cable.

2.4 CONTROLS

Front Panel

AC ON - switch controls power
Voltage Adjust - Potentiometer, Adjusts voltage output.

Top Cover (Recessed Controls)

Current Limit - Potentiometer adjust current limiting point
OV Adjust (option) potentiometer adjust overvoltage protection point in units having this optional feature.

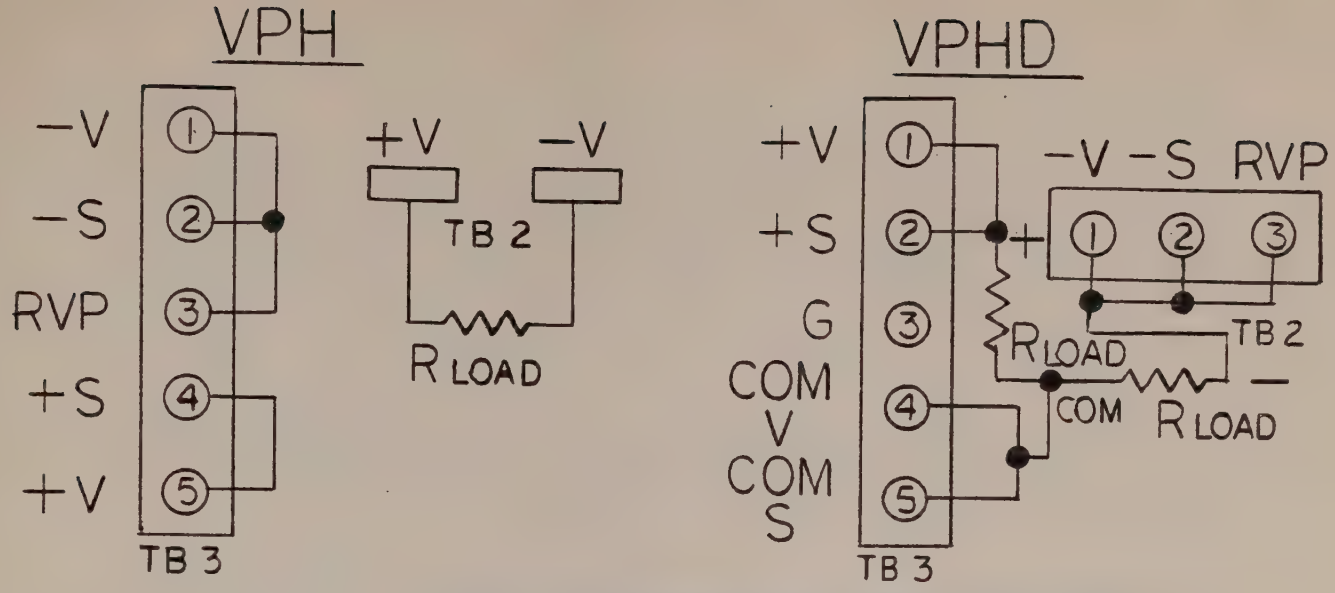

FIG 2-1 LOCAL PROGRAMMING, LOCAL SENSING

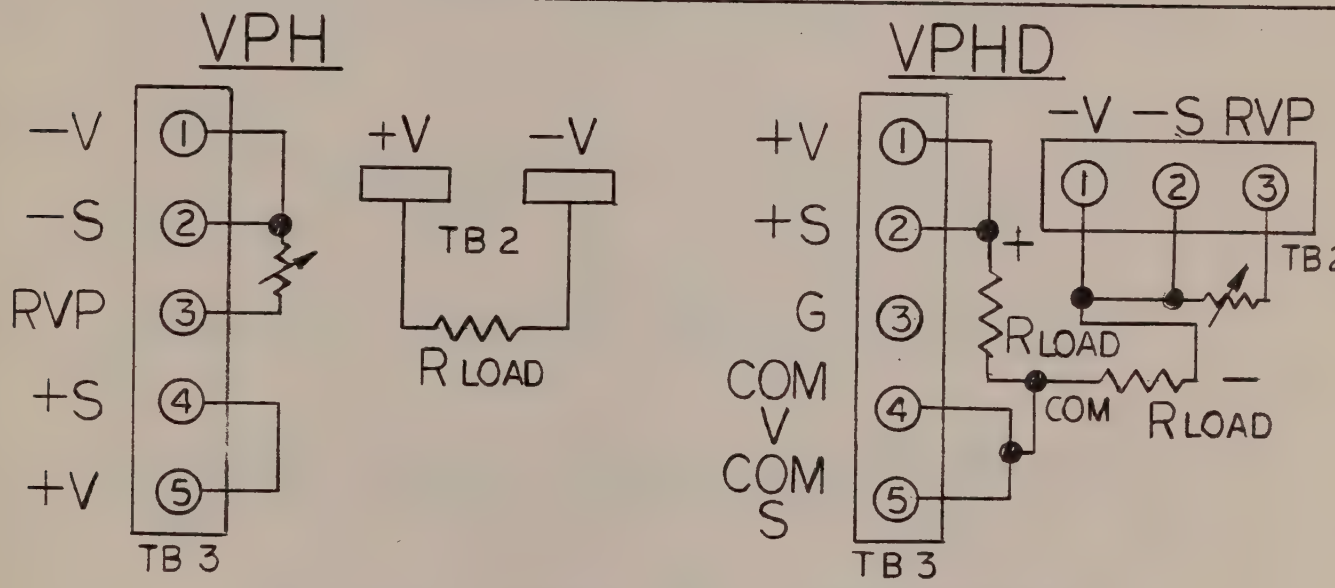

FIG 2-2 REMOTE VOLTAGE PROGRAMMING

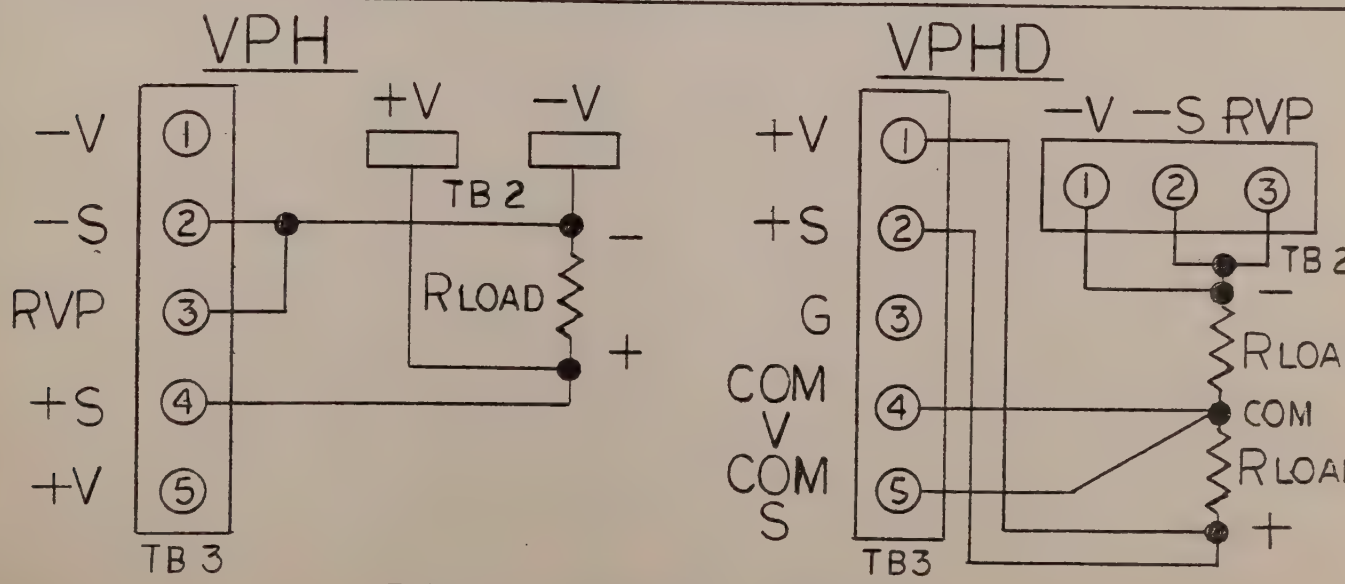

FIG 2-3 REMOTE SENSING

Internal

All internal control settings have been factory preset and require no additional adjusting. However, if it should become necessary to adjust any of the internal controls due to circuit changes caused by component aging or replacement, refer to the calibration section of this manual.

2.5 OPERATION

Control Settings

Set front panel control full CCW, top recessed controls fully CW.

Shorting Links

Prior to the application of power, connect all loads, external wiring and shorting links required for the mode of operation desired.

Grounding

Either side of the output may be grounded, or the output may be used in a floating condition.

Power On

Connect the unit to a nominal AC input power source. Set AC power switch to ON, and observe that pilot lamp is lit.

Warm-Up

No warm-up time is necessary to place the unit into operation. However, a 30 minute warm-up period is recommended to reach rated stability. The unit is now ready for operation.

SECTION 3

THEORY OF OPERATION

3.1 GENERAL

The purpose of the ValuPower series power supplies is to transform and rectify the AC input into a well regulated, stable and adjustable DC output. The following paragraphs describe the major circuits used in the power supply. As each circuit is described, reference should be made to both the Block Diagram, Figure 3-1 and the Schematic Diagram in the rear of this manual.

Primary Input

Input power is obtained through power transformer T101, diodes and filter capacitors. When power switch S101 is set to ON, the output indicator lamp DS 101 glows and AC power is applied to T101 and cooling fan B101. Regulated DC output voltage is immediately available from the power supply.

Series Regulator

The rectified voltage from the diodes and filter capacitors is directed through the Series Pass transistors. The conduction of these transistors is controlled by circuitry which causes them to act as variable resistors. Their overall resistance varies in accordance with the need of the power supply to increase or decrease its output voltage or current. The Series Pass transistors are controlled by driver stages which amplify signals from the Error Amplifier.

Reference Supply, Comparator, Error Amplifier, and Current Limiting

A single integrated circuit, A1, combined the circuitry required to perform the task usually required by many discrete components.

The stable reference voltage is generated and indicated at the circuit reference V REF. When A1 gets the zener regulated voltage across its terminals 5 and P, a precision voltage reference is developed across its terminals 4 and 5. A fixed sample of this voltage is fed into terminal 2 which is one input of the error amplifier.

The voltage which A1 compares the reference voltage to, is fed into terminal 3. Any change in the output voltage is automatically compensated for as the error amplifier generates a correction drive signal at terminal 6 which changes the output voltage accordingly.

Current limiting is provided by input 10 which will control the error amplifier's output when an overcurrent condition is present.

Terminal A is a compensating input to A1, to insure stability and prevent oscillations under certain load conditions.

3.1 Continued

Overvoltage Circuit (Option)

A sample of the output voltage is developed across R21. This sample is brought to terminal 1 (anode) of the silicon unilateral switch (SUS), which has the characteristics of suddenly conducting when the applied voltage exceeds a minimum threshold. When the SUS conducts it applies a gate signal to the SCR, which crowbars the output to nominal zero.

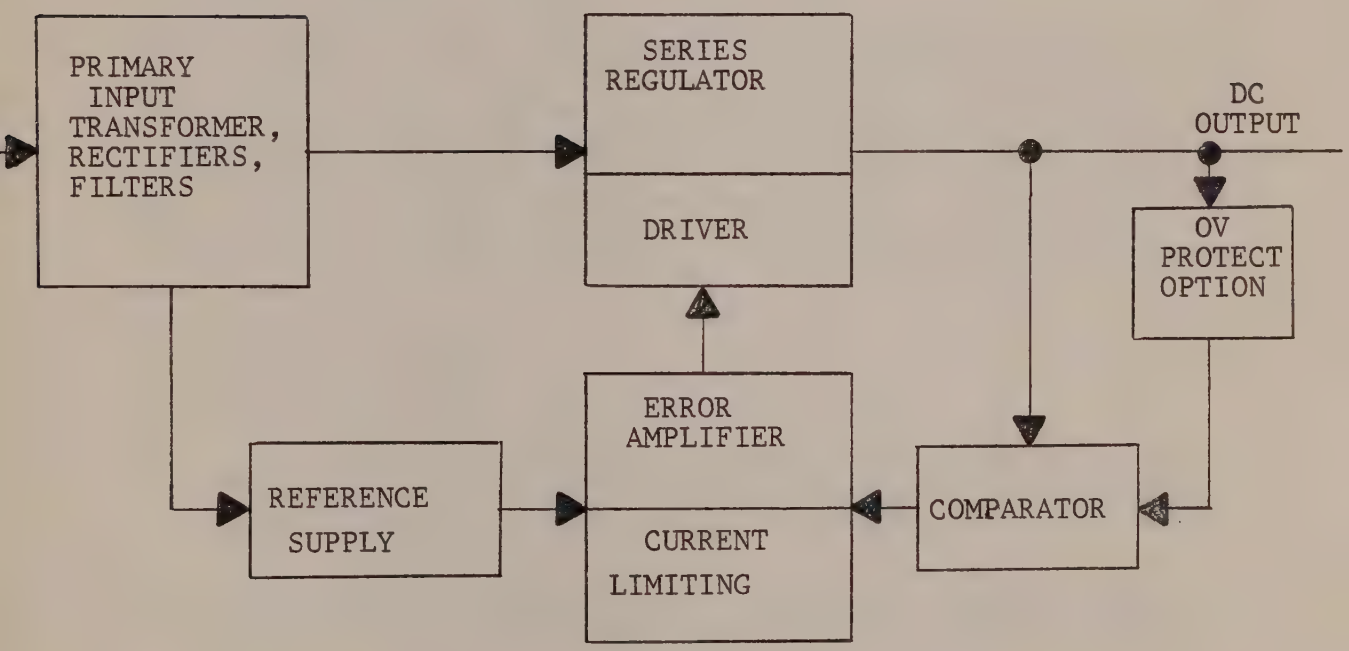

BLOCK DIAGRAM

FIGURE 3-1

NOTE: The dual output unit uses the negative output as the Master voltage with the positive output circuitry tracking automatically.

SECTION 4

CALIBRATION AND MAINTENANCE

4.1 GENERAL

The following adjustments should be made when necessary to assure optimum operating characteristics and maximum efficiency of the ValuPower series power supplies.

4.2 TEST EQUIPMENT REQUIRED (Or Equivalent)

1. Systron Donner Digital Multimeter Type 9025
2. External Current Shunt (150A rating)
3. Variable Auto transformer, 30 ampere rating

Shorting Link Application

For test purposes shorting links should be connected across rear panel barrier strip terminals 1 and 2, 2 and 3, 4 and 5, and 6 and 7 to provide local sensing and local voltage programming operation. To reduce pickup, shielded wire must be used for all connections between test equipment and the power supply being tested. To prevent ground loops, it is important that only one ground connection be made, as shown in Fig. 4-1. Tighten all terminals as securely as possible and set the front panel control. CW.

4.3 CALIBRATION PROCEDURE

Ammeter Calibration

1. Using a standard ammeter in series with an external load, adjust the load so the unit will operate at its maximum rated current (as indicated on the standard ammeter) and voltage output.
2. Adjust ammeter adjust control (VPH R24, VPHD R45) until ammeter M101 indicates the same current as the standard meter.

Current Limit Test

1. Establish nominal output voltage
2. Set current limit control VPH R11, VPHD R3 fully CW
3. Using an external load, apply a 20% current overload to the unit under test.
4. Adjust current limit control until the overload, as indicated on ammeter MI, is limited to between 5% and 10% (1.05 to 1.10 maximum rated current).

4.3 Continued

Constant Voltage Operation

Load Regulation Test

With the equipment connected as shown in Figure 4-1, connect a suitable load resistance across the output terminal connections. The load resistance selected must be able to dissipate the rated power of the unit (P=IE) and must be of sufficient value to yield the rated output current when the rated voltage is applied. Note the voltage indicated on the Digital Voltmeter. Disconnect the resistive load from the output.

The maximum change in output DC voltage should not exceed by more than .02% or 5mv (whichever is greater) that of the output voltage indicated with the load resistance applied across the output terminals.

Line Regulation Test

Place the resistive load across the output and note the voltage indicated on the DVM. Vary the AC input power 10% above and below the nominal AC input level. The maximum change in output voltage should not exceed by more than ±0.02% or mv (whichever is greater) that of the output voltage measured at either extreme of the AC input.

Ripple Voltage Test

In order to reduce pickup, shielded test leads should be used in making ripple measurements. With the resistive load connected across the output terminals, measure the AC ripple with the AC scale of the DVM. Vary the AC input power 10% above and below the nominal AC input level. The maximum ripple amplitude should not exceed 1mv RMS.

Overvoltage Sensitivity (option) (See Page 4-5 for Dual Unit)

The trigger point of the OV protection circuit is determined by the setting of the OV control R21, located through the top cover. To set the OV circuit to trigger within the output range of the power supply, set R21 CW. Turn on the supply and adjust it for the desired OV firing point. Turn R21 CCW until the output voltage drops as indicated by the voltmeter.

To set the OV circuit to fire at higher output voltage than the output voltage of the supply, a second current limiting type power supply is needed. With the supply under test, set its output voltage to any value. Turn R21 CW and connect the second supply across its output terminals. Set the second supply's output voltage to the desired OV firing point. Turn R21 CCW until the output of the supply drops to a low value as indicated on the voltmeter. This indicates that the OV circuit has fired at the voltage set on the second power supply.

4.4 MAINTENANCE

GENERAL

This power supply is a precision electronic instrument. It is strongly recommended that only experienced troubleshooting personnel perform troubleshooting operations or attempt to repair the unit. If the power supply appears to be malfunctioning at all, the following procedure is recommended for isolating possible defects.

Loads and Interconnections

1. Disconnect all loads and interconnections.

2. Connect a resistive load across the output terminals and operate the unit to determine whether the fault lies within the unit or externally. Observe that shorting links are in place across terminals to provide local sensing operation.

3. Set input voltage to nominal value (115 VAC) and operating controls for rated output. Satisfactory operation at this time would indicate that any malfunction previously encountered, is external in nature. All interconnections and loads normally used in conjunction with this power supply should then be carefully checked for electrical defects.

Troubleshooting

1. Set Voltage Adjust control fully CW. Use a high impedance digital voltmeter to check the voltages across the various circuit components, if shown on the Schematic Diagram located at the rear of this instruction manual. Any sample voltages listed apply only if the unit is operating at its nominal AC input, and has a dummy load of sufficient size connected across its output to allow operation at maximum rated current and voltage output levels. Any reading which is grossly incorrect, indicates that the stage being tested or the one immediately preceding it is defective. The Block Diagram, Schematic Diagram and appropriate sections of the Theory of Operation will prove helpful in any troubleshooting work. Proper polarity to be observed when testing can be easily obtained from the Schematic Diagram.

2. If voltage checks show no noticeable deviations from the prescribed values, disconnect AC power and proceed with point-to-point resistance checks across pots, switches, diodes, resistors, transistors, in that order.

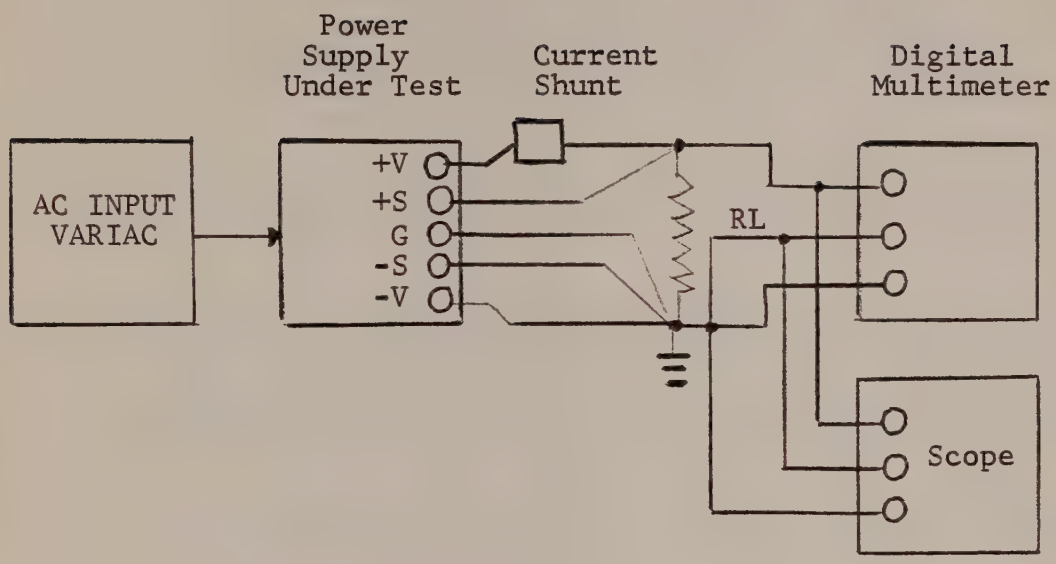

CONSTANT VOLTAGE
OPERATION

TEST EQUIPMENT SET-UP

FIGURE 4-1

ADDENDUM FOR DUAL OUTPUT VPHD

VPHD OVERVOLTAGE PROTECTION

The overvoltage protection provided on the dual output VPHD is one whereby the total voltage of the plus and minus outputs is sensed. The overvoltage trip point is therefore approximately twice that of each individual supply. If either supply should go high in voltage it will cause the overvoltage crowbar to clamp both the plus and minus outputs to nominal zero volts.

The trigger point of the OV protection circuit is determined by the setting of the OV control R21, located through the top cover.

To set the OV circuit to trigger within the output voltage sum of the plus and minus voltages, set R21 CW. Turn on the supply and adjust the negative output voltage (the negative output is the master voltage with the positive output circuitry tracking automatically) for the desired OV firing point. Turn R21 CCW until the output voltage drops as indicated by the voltmeter.

To set the OV circuit to fire at a higher output voltage than the output voltages of the supply will adjust to, a second current limiting type power supply is needed.

Set the supply under test to its desired voltage with R21 turned CW. Connect the second supply across the plus and minus terminals of the supply under test and set its output voltage to the desired OV trip point. Turn R21 slowly CCW until the OV triggers as indicated by the drop in output voltage. This indicates that the OV circuit has fired at the voltage set on the second power supply.

**- REF DWG NOS FOR VPH5-60-S6539A

*- INDICATES DEVIATION FROM STANDARD VPH5-60 MOV

ITEM NO.	SIZE	PART NUMBER	DESCRIPTION	REFERENCE NO.	ASSY QTY	ACT. CODE	ISS. QTY	SHT QTY
1		065114	SHIPPING ASS'Y		X	2		
5	D	124150	SCHEMATIC, OV		REF	-		
6	A	1269	SPECIAL TEST DATA					
7	A	1301	" " "					
9	B	PD27841	ASS'Y., TOP COVER & LABEL	** PD27880	1	2		
10	D	065613	COVER, FINISHED		1	2		
11	A	065148	AC - COVER		1	2		
12								
13			NAMEPLATE	069003	1	R		
14		T970160	6-32 x 1" B.H. SCREW		2	R		
15		840405	PLUG BUTTON		1	R		
16					1	1		
17	B	PD27347	ASS'Y., CHASSIS # 1	**- PD27877	1	2		
18	D	065608	CHASSIS, FINISHED		1	2		
21		840192	FEET, RUBBER		4	1		
22		T971020	1/4-20 x 1 1/4 HEX BOLT		2	1		
23		820371	CAPACITOR, 25000MF, 25V	C105, 106, 108	3	1		
25		820274	↓ , 6000MF, 40V	C107	1	1		
27		106664	FAN	B101	1	1		
29		106879	CLAMP, CAPACITOR		1	1		
31		100725	↓ ↓		1	1		
33	B	065612	↓ ↓		1	2		

DESCRIPTION: SEE ECO 15165 8-19-80

MODEL	JOB NO.	LOT QTY	LOT NO.	CODE IDENT
				52542

PLANNER | PREP | DATE 10-20-75 | SYSTRON DONNER CORPORATION

CHK'D

MAT. DUE | APP'D

SHIPPING ASS'Y
VPH5.2-50 MOVS6539
VPH5-60 MOVS6539A

B.O. REQ.

B.O. COMP

DRAWING NO.

REF	SIZE		REV
—	P	065114	B

SHEET 1 OF 8

*-REF. DWG'S FOR VPH5-60-S6539A
*-INDICATES DEVIATION FROM STANDARD VPH5-60-MOV

	PART NUMBER	DESCRIPTION	DESIGNATION	ASSY QTY	ACT CHG QTY	ISS. QTY	SHT QTY
	PD27347	ASS'Y CHASSIS #1 (CONT.)**	PD27877	-	-		
5C	065609	BKT. MTG. XFMR & CHOKE		1	2		
6							
7	T910110	GROMMET		1	R		
8	T910010	"		1	R		
9	PD25173	HEATSINK ASS'Y #2		1	2		
0	118982	HEATSINK ADDITION #1		1	2		
1	705071	TRANSISTOR	Q101 Q102	2	1		
2	700196	"	Q103	1	1		
3	830101	" SOCKET		2	1		
4	830103	" "		1	1		
5	T990290	MICAWASHER		2	R		
6	T990285	" "		1	R		
7	859019	TERMINAL STRIP		1	1		
9	119112	PLATE FAN RIGHT		1	2		
0	119122	" " LEFT		1	2		
1	T950174	INSULATION RUBBER		1	R		
2A	PD27346	REAR PANEL ASS'Y		1	2		
3C	069051	REAR PANEL		1	2		
4	069116	AC DIAL PLATE		1	2		
5	117377	FUSE HOLDER		2	1		
6	870197	FUSE 8A 250V	F1 F2	2	1		
7	780692	FUSE LABEL 8AMPS.B.		1	1		
8	850150	BARRIER STRIP	TB1	1	1		
9	118242	BLOCK, INSULATOR	TB2	1	2		
0	850052	BARRIER STRIP	TB3	1	1		
1	840217	" " LINKS		3	1		
2	100827	HEX SPACERS 5/16 lg		2	1		
3	069115	AC INPUT FOILCAL		1	1		
4B	PD25010	ASS'Y, CHASSIS #2		1	2		
5	504291	TRANSFORMER	T101	1	2		

52542

SHIPPING ASS'Y
VPH 5.2-50-S6539
VPH5-60-S6539A

065114

**- REF. DWG NO'S FOR VPH5-60-S6539A ☆-SEE PAGE 8

*- INDICATES DEVIATION FROM STANDARD VPH5-60-MOV

ITEM NO.	SIZE	PART NUMBER	DESCRIPTION	REFERENCE NO	ASSY QTY	ACT. CODE	ISS. QTY	SHT QTY
		PD25010 (CONT)	ASSLY, CHASSIS #2		X	-		
67		...504125	CHOKE	L101	1	2		
68	B	118222	BAR, BUSS, POS. OUTPUT		1	2		
69	C	118232	↓ ↓ NEG. ↓		1	2		
70	B	118292	SHUNT	R117	1	2		
71		T990450	P.C. SUPPORT		2	1		
72	A	PD25009	ASSLY, FRONT PANEL		1	2		
73	C	118284	FRONT PANEL, FIN.		1	2		
74		06516701	METER 0-100 A-ASSY	M101	R	R		
75		06516902	—"— 0-8 V-ASSY	M102	R	R		
76		116669	SWITCH	S101	1	1		
77		770090	L.E.D.	DS101	1	1		
78		600140	RES., V ADJ. 500-2W	R116	1	1		
79		085420	OUTPUT LABEL	PD27772	1	1		
80		840220	SHAFTLOCK		1	1		
81	A	PD25175	HEAT SINK ASSY & WIRING		1	2		
82		118992	HEAT SINK ADDITION		1	2		
83	B	PD25008	HEAT SINK ASSLY & WIRING		1	2		
84		640190	RES. 10Ω 2W	R115	1	1		
85		640011	↓ .1Ω 5W	R104 - R113	10	1		
87	B	PD27345	ASSLY, HEATSINK O.V.	**-PD27875	1	2		
88		T115802	HEAT SINK, FAB		1	2		
89		065444	BRKT, PC SUPPORT		2	2		
90		118602	BAR, BUSS, EMITTER		1	2		
91		T990415	NUT, PUSH, NYLON		3	R		
92		T990405	↓ ↓ ↓		2	R		
93		T990450	P.C. SUPPORT		2	1		
94								

DESCRIPTION: SEE TCO T116 8-19-80

REV: A1

MODEL	JOB NO.	LOT QTY	LOT NO.	CODE IDENT
				52542

PLANNER | PREP | DATE | SYSTRON DONNER CORPORATION

CHK'D

MAT. DUE | APP'D

SHIPPING ASSLY
VPH5.2-50MOVS6539
VPH5-60MOVS6539A

B/U REQ.

DRAWING NO.

REF	SIZE	PART NO.	REV
—	P	065114	A1

B/U COMP

USED ON

SHEET 3 OF 8

FORM 28-A

**. REF. DWG. NO'S FOR VPH5-60-S6539A

*. INDICATES DEVIATION FROM STANDARD VPH5-60-MOV

M O.	SIZE	PART NUMBER	DESCRIPTION	REFERENCE NO.	ASSY QTY	ACT. CODE	ISS. QTY	SHT QTY
		PD27345 (CONT)	ASS'Y., HEATSINK	**-PD27875	-	-		
9		T960347	RIVET		4	R		
1		700088	TRANSISTOR, 2N3771	Q104-113	10	1		
3		720132	DIODE	CR108	1	1		
5		720129		CR107	1	1		
7		720330	70H10A	CR103 & 104	2	1		
9		830101	SOCKET, TRANSISTOR		10	1		
1		T990350	RING, INSULATOR		1	R		
3		T990307	WASHER, MICA		2	R		
5		T960085	LUG, SOLDER		1	R		
7		880003	SWITCH, THERMAL	S102	1	1		
9								
21		720008	DIODE - SCR	CR106	1	1		
23		T990340	RING, INSULATOR		3	R		
25		T990295	WASHER, MICA		2	R		
27		T960640	LUG		1	R		
29A		065614	BAFFLE		1	2		

MODEL | DWG NO | CODE IDENT 52542

PLANNER | PREP DATE | SYSTEM OWNER

SHIPPING ASS'Y
VPH5-2-50 MOVS6539
VPH5-60 MOVS6539A

SIZE | 065414

SHEET 4 OF 8

ITEM NO.	SIZE	PART NUMBER	DESCRIPTION	REFERENCE NO	ASSY QTY	ACT. CODE	ISS. QTY	SHT QTY
		PD25010 (CONT)	ASS'Y., CHASSIS #2		—	—		
31	B	122852	STRIP, OUTPUT HOLDING		1	2		
33	C	PD25006	ASS'Y., COMP. BD.		1	2		
35	D	T112256	FAB., P.C.B		1	2		
36	D		ARTWORK	112256	REF	—		
37		T960464	TERMINAL		16	R		
38		543131	↓ RIGHT ANGLE		16	R		
41		102598	CAPACITOR, 100μF, 50V	C1	1	1		
43		800090	.01μF, 600V	C3	2	1		
44		800002	470pF, ↓	C4	1	1		
45		810060	35μF, 25V	C5	2	1		
46			S/A C5	C6				
47		100134	.05μF, 200V	C7	1	1		
48			S/A C3	C8				
49		100178	.1μF, 100V	C9	1	1		
51		821006	68μF, 15V	C11	1	1		
52		100063	10μF 25V	C12	1	1		
53		810161	200μF ↓	C13	1	1		
55		100413	DIODE, 1N4004	CR1	2	1		
56			S/A CR1	CR2				
57		720410	1N4741A	CR3	1	1		
58		100387	1N753 A	CR4	1	1		
59		720167	1N5221 B	CR5	1	1		
60		100413	1N5395	CR6	4	1		
61			S/A CR6	CR7				

MODEL	JOB NO.	LOT QTY	LOT NO.	CODE IDENT
				52542

PLANNER | PREP DATE | SYSTRON DONNER CORPORATION

CHK'D

MAT. DUE | APP'D

SHIPPING ASS'Y
VPH5.2-50MOVS6539
VPH5-60MOVS6539A

R/U REQ

REF	SIZE	PART NO.	REV
—	P	065114	

B/U COMP

SHEET 5 OF 8

ITEM NO.	SIZE	PART NUMBER	DESCRIPTION	REFERENCE NO.	ASSY QTY	ACT. CODE	ISS. QTY	SHT QTY
		PD25006 (CONT)	ASS'Y., COMP. BD.		-			
163		100415	DIODE, IN746 A	CR8	1	1		
164		741001	UN-SW 2N4990	CR9	1	1		
166		720440	IN 4148	CR11	1	1		
167			S/A CR6	CR12				
168				CR13				
170		025756	I.C.	A1	1	1		
172		106587	TRANSISTOR, 2N2219A	Q1	1	1		
174		640390	RESISTOR, 220Ω, 2W, 10%	R1	1	1		
175								
176		600207	POT, 2K, 1/2W, 20%	R3	1	1		
177		620436	2.26K, 1/2W, 1%	R4	1	1		
178		620488	3.4K,	R5	1	1		
179		620534	4.64K,	R6	1	1		
180		620402	1.96K,	R7	1	1		
181		106012	2.2Ω, 10%	R8	2	1		
184		117188	POT, 100Ω, 1/2W, 20%	R11	4	1		
185		101474	330Ω, 1/2W, 10%	R12	2	1		
186			S/A R12	R13				
187			R8	R14				
188		640434	400Ω, 5W, 5%	R15	1	1		
189			S/A R11	R16				
190		640182	7.5Ω, 10W	R17	2	1		
191			S/A R17	R18				
192		640250	20Ω, 5W, 5%	R19	1	1		
193		640140	3.3Ω, 2W, 10%	R20	1	1		

MODEL	JOB NO	LOT QTY	LOT NO	CODE IDENT
				52542

PLANNER | REP | DATE | CHK | APP | MAT. DUE | B.L. REQ.

SYSTRON DONNER CORPORATION

SHIPPING ASS'Y
VPHS 2-50MOVS6539
VPHS-60 MOVS6539A

REVISIONS

P 065114

F.G. COMP

USED ON

SHEET 6 OF 8

** - REF. DWG. NO'S. FOR VPH5-60-S6539A

ITEM NO.	SIZE	PART NUMBER	DESCRIPTION	REFERENCE NO.	ASSY QTY	ACT. CODE	ISS. QTY	SHT QTY
		PD25006 (CONT)	ASS'Y., COMP. BD.					
94			RESISTOR, S/A R11	R21				
95		101458	1.5K, 1/2W, 10%	R22	1	1		
96		101467	1K, ↓ ↓	R23	2	1		
97			S/A R11	R24				
98		640380	150Ω, 2W, 10%	R25	1	1		
99		611100	2.2 MEGΩ 1/2W	R26	1	1		
200		101511	4.7K, 1/2W, 10%	R27	2	1		
201		101510	6.8K, ↓ ↓	R28	1	1		
202			S/A R23	R29				
203		101667	220Ω, 1/2W, 10%	R30	1	1		
204			S/A R27	R31				
205		101454	2.2KΩ 1/2W 1%	R32	1	1		
206		840422	PAD, IC		1	R		
207		840411	, TRANSISTOR		1	R		
208		840420	, ↓		1	R		
210		PD25174	H. SINK #2 ASSLY + WIRING		1	2		
211		640020	RESISTOR .2Ω 3W 10%	R101, R102	2	1		
212		101467	1K 1/2W 10%	R103	1	1		
213		101498	100Ω 1/2W 10%	R114	1	1		
215		PD27349	WIRING T101-L101	**-PD27879	1	2		
216		800185	CAP. .1μF 250V	C101, C102	2	1		
217		800304	1.0μF 250V	C103, C104	2	1		
218		710454	DIODE 1N5401	CR101	2	1		
219			S/A CR101	CR102				

MODEL	JOB NO	QUANTITY	CODE IDENT 52542
PLANNER	PREP DATE	SYSTEM	DONNER
MAT. DUE	APPD	SHIPPING ASS'Y VPH5.2-50 MOVS6539 VPH5-60 MOVS6539A	
			REV
		065114	
		SHEET 7 OF 8	

**-REF. DWG. NO'S FOR VPH5-60-S6539A

ITEM NO.	SIZE	PART NUMBER	DESCRIPTION	REFERENCE NO.	ASSY QTY	ACT. CODE	ISS. QTY	SHT QTY
		065114 (CONT)	SHIPPING ASSLY		-	-		
227		T942306	HARNESS AC/DC		1	2		
228		PD27343	WIRE LIST	**-PD27874				
229		VPH-1	HARNESS LAYOUT					
230								
231		T942416	HARNESS DC		1	2		
232		PD27091	WIRE LIST (VPH-2)					
233								
235		PD27350	WIRE LIST - JUMPERS	**-PD27882	1	2		
236								
237								
238								
239A		PD27348	WIRING REAR CHAGS	**-PD27876	1	R		
240A		PD25003	WIRING - PC BRD		1	R		
241A		PD25012	WIRING - FR. PANEL		1	R		
245B			WIRING - CHASSIS	PD25011	1	R		
246A		065167-01	METER ASS'Y 0-100A	M101	1	2		
247D		065160	METER MOVEMENT 1MA 77Ω		1	1		
248		117397	BLANK DIAL	B065167	1	1		
249B		065169-02	METER ASS'Y - 0-8V	M102	1	2		
250D		065160	METER MOVEMENT 1MA 77Ω		1	1		
251		117397	BLANK DIAL	B065169	1	1		
252B		065049	P.C. BOARD (METER CAL.)		1	1		
253		102181	POT 1KΩ	R401	1	1		
254		102278	RES. 7.50KΩ	R402	1	1		

MODEL | CODE IDENT 52542

PLANNER | PREP | DATE | SYSTRON DONNER CORPORATION

SHIPPING ASSLY
VPH5.2-50 MOVS6539
VPH5-60 MOVS6539A

MAT. DUE | APP'D

B.O. REQ.

B.O. COMP

— P 065114

SHEET 8 OF 8

DESCRIPTION

REV

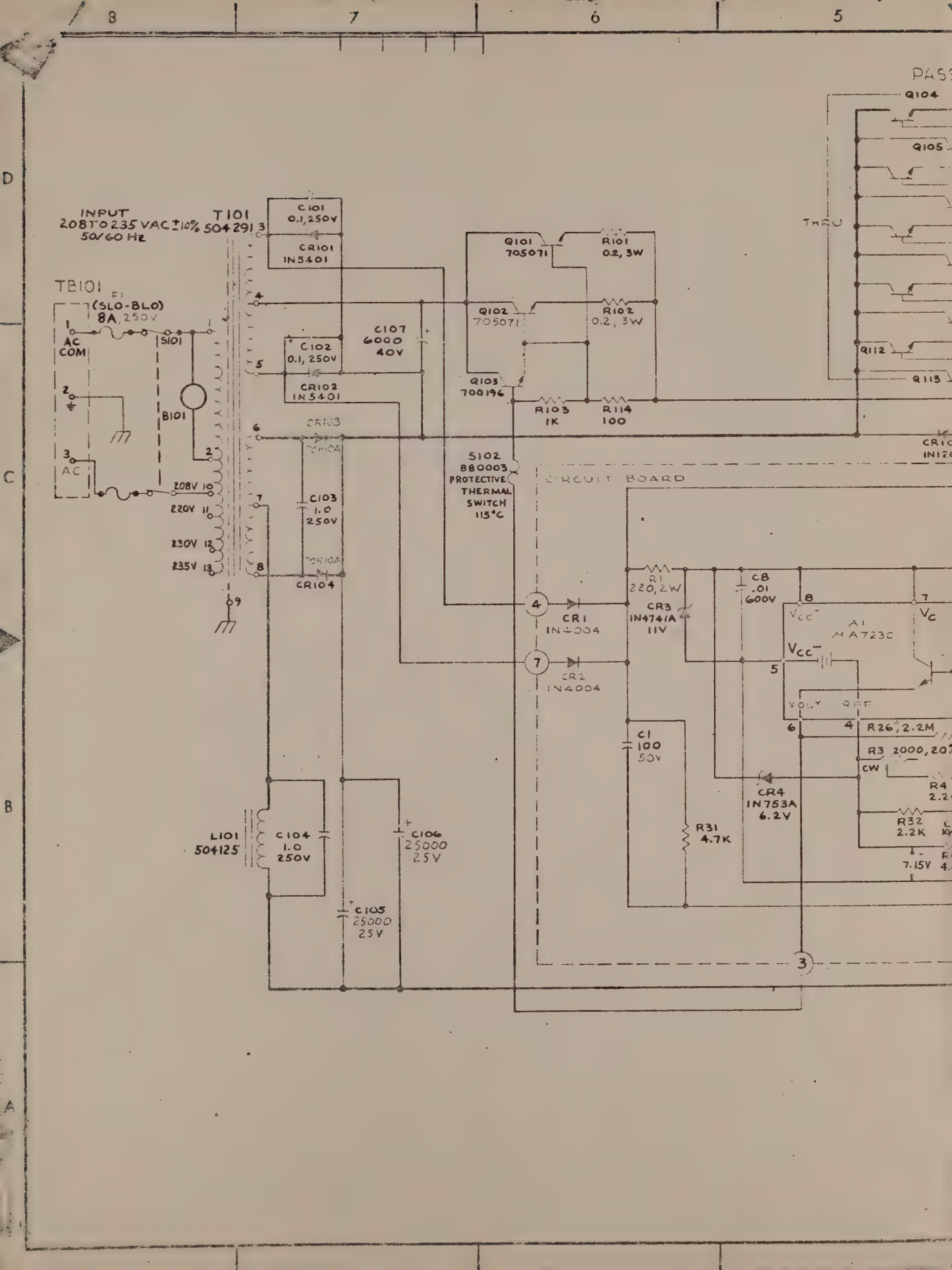
INPUT
208 TO 235 VAC ±10%
50/60 Hz
T101
504291
TB101
F1
(SLO-BLO)
8A, 250V
AC
COM
AC
S101
B101
208V
220V
230V
235V
C101
0.1, 250V
CR101
IN5401
C102
0.1, 250V
CR102
IN5401
CR103
CR104
C103
1.0
250V
C107
6000
40V
Q101
705071
Q102
705071
Q103
700196
R101
0.2, 3W
R102
0.2, 3W
R103
1K
R114
100
S102
880003
PROTECTIVE
THERMAL
SWITCH
115°C
CIRCUIT BOARD
R1
220, 2W
CR1
IN4004
CR2
IN4004
CR3
IN4741A
11V
C8
.01
600V
A1
μA723C
C1
100
50V
R31
4.7K
CR4
IN753A
6.2V
R26, 2.2M
R3 2000, 20
R32
2.2K
7.15V
L101
504125
C104
1.0
250V
C105
25000
25V
C106
25000
25V
THRU
Q104
Q105
Q112
Q113

REVISIONS					
B	REDRAWN FROM "E" SIZE.				
C	CR103 & CR104 WAS P/N 720488				
D	CHANGED S101 TO A DPST, REMOVED CONNECTIONS FROM TB101 TERMINALS 4,5,6		TCC 116	7/80	RJB

NOTES

1. UNLESS OTHERWISE SPECIFIED ALL RESISTORS ARE 1/2W ±5%. RESISTANCE VALUES ARE EXPRESSED IN OHMS. CAPACITANCE VALUES ARE EXPRESSED IN MICROFARADS
2. ALL MODELS ARE SHOWN WITH OVER VOLTAGE PROTECTION. TO DELETE, OMIT CR106, R19 THRU R23, C7 & C9, CR8 & CR9.
3. * DENOTES SELECT AT TEST.
4. LAST REFERENCE DESIGNATIONS USED ARE: R32 (ON CKT. BOARD). (R2, R5, R10 NOT USED). R117 (ON POWER CIRCUIT) C13 (ON CKT BOARD). (C2, C10-NOT USED). C 08 (ON POWER CIRCUIT). CR13 (ON CKT. BOARD). CR108 (ON POWER CIRCUIT) (CR105 NOT USED). Q113 (ON POWER CIRCUIT). A1 (ON CKT. BOARD)
5.

MODEL	CR104	M101
VPH5.2-30 S6489	700488	5A
VPH5.2-50 S6539	700488	10A
VPH5-60 S6539A	700488	10A

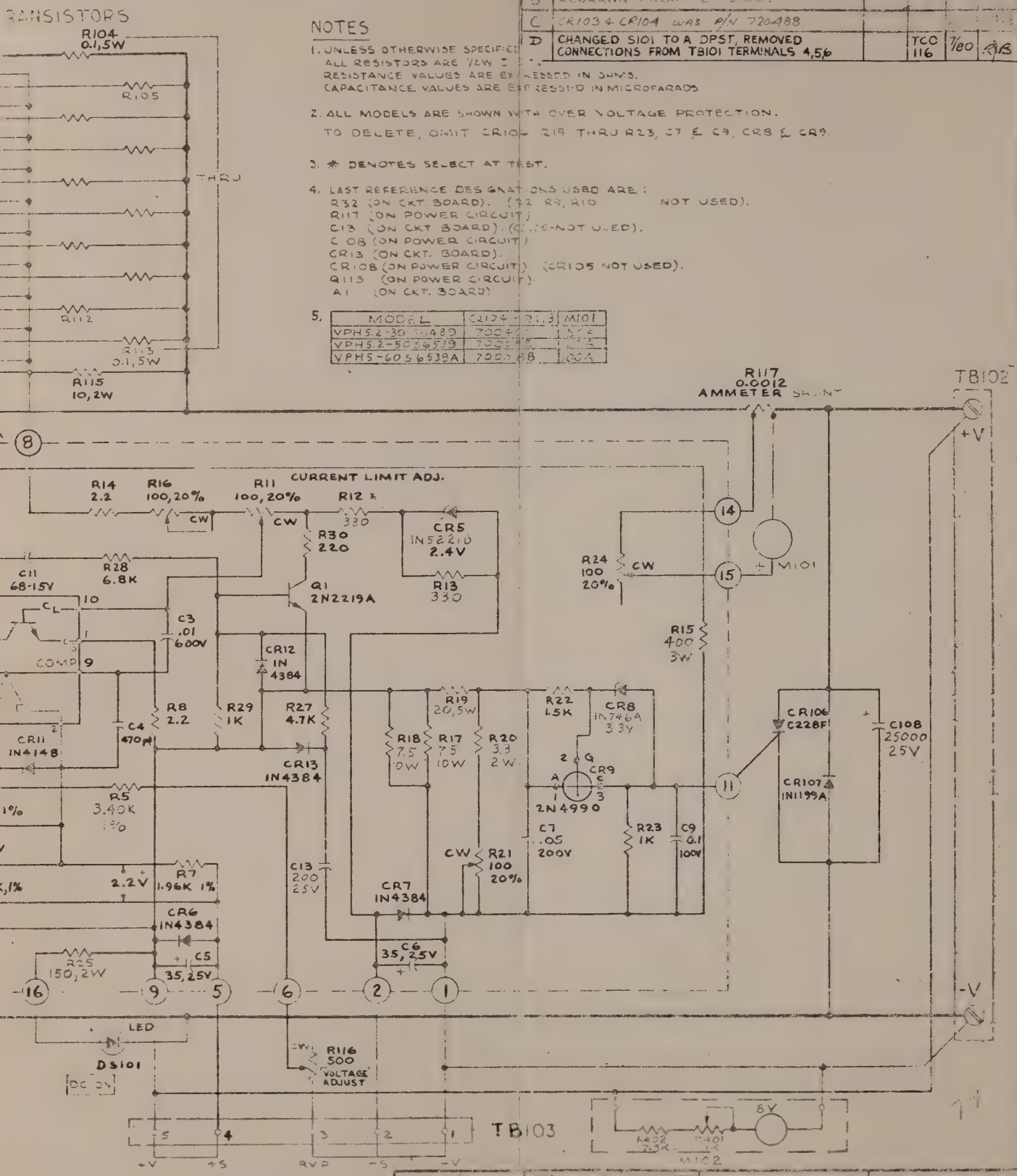

PROPRIETARY DATA

Furnished under United States Government Contract No. ... Shall not be either released outside the Government or used, duplicated or disclosed in whole or in part for manufacture or procurement without the written permission of Systron Donner ... except for emergency repair or overhaul work by or for the Government, where the item or process concerned is not adequately covered by existing drawings, specifications or other data. Furnished under other than a Government contract, this data may be used, duplicated and disclosed only for the purpose for which it was furnished, provided that either the receiving user or recipient shall be bound by the following restrictions. This legend shall be included on any reproduction hereof in whole or in part.

SYSTRON DONNER CORPORATION CONCORD CALIFORNIA CODE IDENT 52542	SCHEMATIC VPH5.2-30 S6489 VPH5.2-50 S6539 VPH5-60 S6539A		
APPLICATION	D	124150	D

ITEM NO.	SIZE	PART NUMBER	DESCRIPTION	REFERENCE NO.	ASSY QTY	ACT. CODE	ISS. QTY	SHT QTY
		PD25006 (CONT)	ASS'Y., COMP. BD.					
194			RESISTOR, S/A R11	R21				
195		101459	1.5K, 1/2W, 10%	R22	1	1		
196		101467	1K, ↓ ↓	R23	2	1		
197			S/A R11	R24				
198		640528	150Ω, 2W, 10%	R25	1	1		
200		101511	4.7K, 1/2W, 10%	R27	2	1		
201		101510	6.8K, ↓ ↓	R28	1	1		
202			S/A R23	R23				
203		101667	220Ω, 1/2W, 10%	R30	1	1		
204			S/A R27	R31				
206		840422	PAD, IC		1	1		
207		840411	, TRANSISTOR		1	R		
208		840420	↓ , ↓		1	R		
210		PD25174	H. SINK #2 ASSLY + WIRING		1	2		
211		640020	RESISTOR .2Ω 3W 10%	R101, R102	2	1		
212		610180	1K 1/2W 10%	R103	1	1		
213		610070	100Ω 1/2W 10%	R114	1	1		
215		PD27341	WIRING T101 + L101		1	2		
216		800185	CAP. .1μF 250V	C101, C102	2	1		
217		800304	1.0μF 250V	C103, C104	2	1		
218		710454	DIODE 1N5401	CR101	2	1		
219			S/A CR101	CR102				

MODEL	JOB NO.	LOT QTY	LOT NO.	CODE IDENT
				52542

PLANNER

PREP DATE 10-24-75

CHK'D

APP'D

MAT. DUE

B/U REQ.

B/U COMP

USED ON

SYSTRON DONNER CORPORATION

SHIPPING ASS'Y VPH5.2-30-MOV S6489

DRAWING NO.

REF	SIZE	PART NO	REV
—	P	065175	

SHEET 7 OF 8

REVISIONS

DESCRIPTION

REV

FORM EG-A 11 JUL 75

ITEM NO.	SIZE	PART NUMBER	DESCRIPTION	REFERENCE NO.	ASSY QTY	ACT CODE	ISS. QTY	SHT QTY
		065115 (CONT)	SHIPPING ASSY		—	—		
227		T942306	HARNESS AC/DC		1	2		
228		PD27336	WIRE LIST					
229		VPH-1	HARNESS LAYOUT		5	1		
230								
231		T942416	HARNESS DC		1	2		
232		PD27091	WIRE LIST (VPH-2)					
233						—		
235		PD27342	WIRE LIST - JUMPERS		1	2		
236								
237								
238								
239A		PD27340	WIRING REAR CHAS	PD024998	1	R		
240A		PD025003	WIRING - PC BRD	PD025003	1	R		
241A		PD025012	WIRING - FR. PANEL	PD025012	1	R		
245B			WIRING - CHASSIS	PD25011	1	R		
246A		065079-01	METER ASS'Y 0-50A	M101	1	2		
247B		065025001	METER MOVEMENT 1ma 77Ω		1	1		
248		117114	BLANK DIAL	E065079	1	1		
249B		065069-02	METER ASS'Y 0-10V	M102	1	2		
250B		065025001	METER MOVEMENT 1ma 77Ω		1	1		
251		117114	BLANK DIAL	E065069	1	1		
252B		065048	P.C. BOARD (METER CAL.)		1	1		
253		117121	POT 1KΩ	R401	1	1		
254		106328	RES 9.53KΩ	R402	1	1		
255		103962	HEX NUT		2	1		

MODEL	JOB NO.	LOT QTY	LOT NO.	CODE IDENT
				52542

PLANNER | PREP | DATE | CHK'D | MAT. DUE | APP'D | B/U REQ. | B/U COMP | USED ON

SYSTRON DONNER CORPORATION

SHIPPING ASSY
VPH5.2-30MOV
S6429

DRAWING NO.

REV	SIZE	PART NO.
—	P	065115

SHEET 8 OF 8

REVISIONS DESCRIPTION

REV

FORM E8-A 11 JUL 76

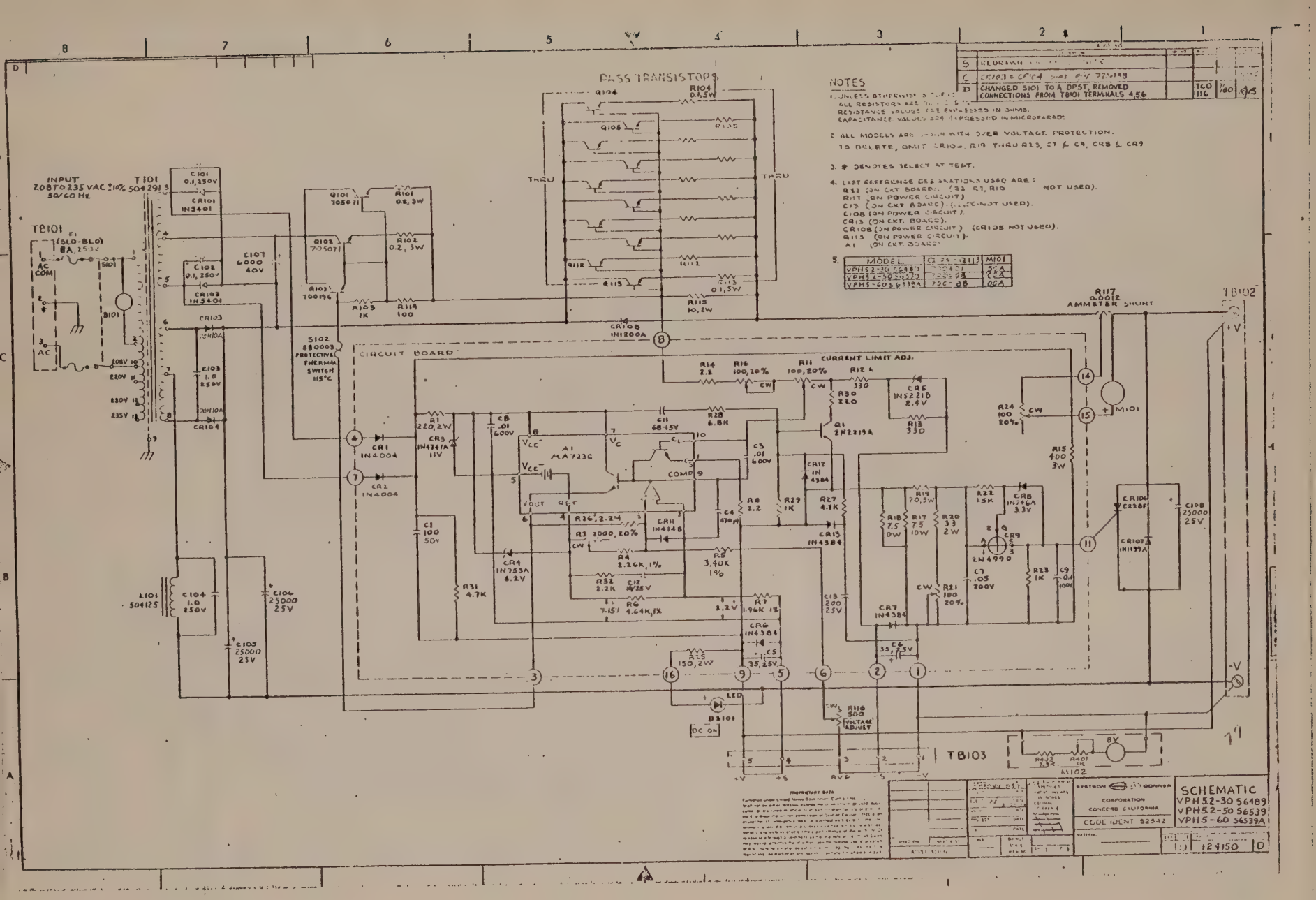

NOTES

1. UNLESS OTHERWISE SPECIFIED:
   ALL RESISTORS ARE [illegible]
   RESISTANCE VALUES ARE EXPRESSED IN OHMS.
   CAPACITANCE VALUES ARE EXPRESSED IN MICROFARADS.
2. ALL MODELS ARE SHOWN WITH OVER VOLTAGE PROTECTION.
   TO DELETE, OMIT CR10[illegible], R19 THRU R23, C7 & C9, CR8 & CR9
3. * DENOTES SELECT AT TEST.
4. LAST REFERENCE DESIGNATIONS USED ARE:
   R32 (ON CKT BOARD). (R2, R7, R10 NOT USED).
   R117 (ON POWER CIRCUIT)
   C13 (ON CKT BOARD). (C2, C6-NOT USED).
   C108 (ON POWER CIRCUIT).
   CR13 (ON CKT. BOARD).
   CR108 (ON POWER CIRCUIT) (CR105 NOT USED).
   Q113 (ON POWER CIRCUIT).
   A1 (ON CKT. BOARD)
5.

MODEL	[illegible]	M101
VPH52-30 56489	[illegible]	5CA
VPH52-50 56539	[illegible]	2CA
VPH5-60 56539A	7[illegible]	0CA

5	REDRAWN [illegible]			
C	CR103 & CR104 [illegible]			
D	CHANGED S101 TO A DPST, REMOVED CONNECTIONS FROM TB101 TERMINALS 4,5,6	TCO 116	7/80	[illegible]

PROPRIETARY DATA

SYSTRON DONNER CORPORATION CONCORD CALIFORNIA

CODE IDENT 52542

SCHEMATIC
VPH52-30 56489
VPH52-50 56539
VPH5-60 56539A

124150 D

* INDICATES DEVIATION FROM STANDARD VPH 5-60 MOV

ITEM NO.	SIZE	PART NUMBER	DESCRIPTION	REFERENCE NO.	ASSY QTY	ACT. CODE	ISS. QTY	SHT QTY
1		065115	SHIPPING ASS'Y.,		X	2		
5	D	124150	SCHEMATIC, OV		REF	-		
6	A	1268	SPECIAL TEST DATA					
9	B	PD278423	ASS'Y., TOP COVER & LABEL		1	2		
10	C	118184	COVER, FINISHED		1	1		
11		065148	AC - COVER		1	2		
12		860181	ROUND SPACER		2	1		
13		780960	NAMEPLATE		1	1		
14		T970160	6-32 X 1" B.H. SCREW		2	1		
15		840405	PLUG BUTTON		1	1		
17	B	PD27339	ASS'Y., CHASSIS # 1		1	2		
18	C	123924	CHASSIS, FINISHED		1	2		
21		840190	FEET, RUBBER		4	1		
23		820371	CAPACITOR, 25000µF, 25V	C105, 106, 108	3	1		
25		820274	, 6000µF, 40V	C107	1	1		
27		106664	FAN	B101	1	1		
29		T900080	CLAMP, CAPACITOR		1	1		
31		100725			1	1		
33	C	118192			1	1		

MODEL	JOB NO.	LOT QTY	LOT NO.	CODE IDENT 53542
PLANNER	PREP DATE 10-22-75	SYSTRON DONNER CORPORATION		
MAT. DUE	CHK'D / APP'D	SHIPPING ASS'Y VPH5.2-30MOV S6489		
B/U REQ.		DRAWING NO.		
B/U COMP		SIZE P	PART NO. 065115	
	USED ON	SHEET 1 OF 8		

REVISIONS DESCRIPTION

REV

FORM E8-A 11 JUL 75

*- INDICATES DEVIATION FROM STANDARD VPH 5-60-MOV

ITEM NO.	SIZE	PART NUMBER	DESCRIPTION	REFERENCE NO.	ASSY QTY	ACT. CODE	ISS. QTY	SHT QTY
		PD27339	ASS'Y., CHASSIS #1 (CONT.)		—	—		
34		860094	HEX SPACERS 5/16"		8	1		
35	C	118212	BRKT, MTG., XFMR & CHOKE		1	2		
* 36		780638	FUSE LABEL 7AMP		1	1		
37		T910110	GROMMET		1	1		
41	A	PD25173	ASS'Y., HEATSINK #2		1	2		
42	C	118982	HEATSINK, ADDITION #1		1	2		
43		705071	TRANSISTOR	Q101 & 102	2	1		
44		700196	↓	Q103	1	1		
45		830101	SOCKET, TRANSISTOR		2	1		
46		830103	↓ ↓		1	1		
47		T990290	WASHER, MICA		2	1		
48		T990285	↓ ↓		1	1		
49		859019	STRIP, TERMINAL		1	1		
50		T910010	GROMMET 3/16		1	1		
51	C	119112	PLATE, FAN, RIGHT		1	2		
52	C	119122	↓ , ↓ , LEFT		1	2		
53		T950174	INSULATION, RUBBER		1	1		
54								
55	A	PD27338	REAR CHASSIS ASS'Y		1	2		
* 56	B	123882	BKT. - TERM STRIP		1	2		
57		840200	HOLDER, FUSE		1	1		
* 58		870194	FUSE, 7A, 250V	F1	1	1		
59		850150	STRIP, BARRIER	TB1	1	1		
60		118242	BLOCK, INSULATOR	TB2	1	2		
61		850052	STRIP, BARRIER	TB3	1	1		
62		840217	LINK, BARRIER STRIP		3	1		
* 63		850064	BARRIER STRIP		1	1		
64	B	PD25010	ASS'Y., CHASSIS #2		1	2		
* 65		504291	TRANSFORMER	T101	1	2		

MODEL	JOB NO.	LOT QTY	LOT NO.	CODE IDENT
				52542

PLANNER — PREP DATE 10-23-75 — CHK'D — APP'D — MAT. DUE — B/U REQ. — B/U COMP — USED ON

SYSTRON DONNER CORPORATION

SHIPPING ASS'Y VPH 5.2-30 MOV-S6489

DRAWING NO.

REF	SIZE	PART NO.	REV
—	P	065115	

SHEET 2 OF 8

REVISIONS DESCRIPTION — REV

FORM E8-A 11 JUL 75

* - INDICATES DEVIATION FROM STANDARD VPH5-60-MOV

ITEM NO.	SIZE	PART NUMBER	DESCRIPTION	REFERENCE NO.	ASSY QTY	ACT. CODE	ISS. QTY	SHT QTY
		PD250100 (CONT)	ASSLY, CHASSIS #2		X	-		
67		504125	CHOKE	L101	1	2		
68	B	118222	BAR, BUSS, POS. OUTPUT		1	2		
69	C	118232	↓ ↓ NEG. ↓		1	2		
70	B	118292	SHUNT	R117	1	2		
72	A	PD25009	ASSLY, FRONT PANEL		1	2		
73	C	118284	FRONT PANEL FIN.		1	2		
* 74		065079-01	METER 0-50A	M101	1	1		
* 75		065069-02	—"— 0-10V	M102	1	1		
76		880611	SWITCH	S101	1	1		
77		770090	L.E.D.	DS101	1	1		
78		600140	RES., V ADJ. 500-2W	R116	1	1		
* 79		085420	OUTPUT LABEL	PD27771	1	1		
80	A	PD25175	HEAT SINK ASSLY + WIRING		1	2		
81		118992	H.SINK ADDITION		1	2		
83	B	PD25008	HEAT SINK ASSLY + WIRING		1	2		
84		640190	RES. 10Ω 2W	R115	1	1		
85		640011	↓ .1Ω 5W	R104 + R113	10	1		
87	B	PD25007	ASSLY, HEAT SINK O.V.		1	2		
88		T115802	HEAT SINK, FAB		1	2		
89		118612	BRKT, PC SUPPORT		2	2		
90		118602	BAR, BUSS, EMITTER		1	2		
91		T990415	NUT, PUSH, NYLON		3	1		
92		T990405	↓ ↓ ↓		2	1		

REVISIONS DESCRIPTION

REV

MODEL	JOB NO.	LOT QTY	LOT NO.	CODE IDENT
				52542

PLANNER | PREP | DATE | SYSTRON DONNER CORPORATION

CHK'D

MAT. DUE | APP'D

SHIPPING ASSLY VPH5.2-30MOV S6489

B/U REQ.

DRAWING NO.

REF	SIZE	PART NO.	REV
—	P	065175	

B/U COMP

USED ON

SHEET 3 OF 8

FORM EB-A 11 JUL 75

ITEM NO.	SIZE	PART NUMBER	DESCRIPTION	REFERENCE NO.	ASSY QTY	ACT. CODE	ISS. QTY	SHT QTY
		PD25007 (CONT)	ASS'Y., HEATSINK		-	-		
99		T960347	RIVET		4	1		
101		700401	TRANSISTOR, 2N3771	Q104-113	10	1		
103		720132	DIODE	CR108	1	1		
105		720129		CR107	1	1		
107		720488		CR103 & 104	2	1		
109		830101	SOCKET, TRANSISTOR		10	1		
111		T990350	RING, INSULATOR		1	1		
113		T990307	WASHER, MICA		2	1		
115		T960085	LUG, SOLDER		1	1		
117		880003	SWITCH, THERMAL	S102	1	1		
119								
121		720008	DIODE - SCR	CR106	1	1		
123		T990340	RING, INSULATOR		3	1		
125		T990295	WASHER, MICA		2	1		
127		T960640	LUG		1	1		
129	C	119132	PLATE, DEFLECTOR		1	2		

MODEL	JOB NO.	LOT QTY	LOT NO.	CODE IDENT 52542
PLANNER	PREP DATE 10-23-75	SYSTRON DONNER CORPORATION		
	CHK'D	SHIPPING ASS'Y VPH5.2-30-MOV S6429		
MAT. DUE	APP'D			
B/U REQ.		DRAWING NO.		
B/U COMP		REF — SIZE P PART NO. 665115 REV		
	USED ON	SHEET 4 OF 8		

REVISIONS DESCRIPTION

REV

FORM E8-A 11 JUL 75

ITEM NO.	SIZE	PART NUMBER	DESCRIPTION	REFERENCE NO.	ASSY QTY	ACT. CODE	ISS. QTY	SHY QTY
		PD25010 (CONT)	ASS'Y., CHASSIS #2		—	—		
131	B	122852	STRIP, OUTPUT HOLDING		1	2		
133	C	PD25006	ASS'Y., COMP. BD.		1	2		
135	D	T112256	FAB., P.C.B		1	2		
136	D		ARTWORK	112256	REF	—		
137		T960464	TERMINAL		16	1		
138		543131	RIGHT ANGLE		16	1		
141		810132	CAPACITOR, 100µF, 50V	C1	1	1		
143		800090	.01µF, 600V	C3	1	1		
144		800002	470pF,	C4	1	1		
145		810060	35µF, 25V	C5	1	1		
146			S/A C5	C6	1	1		
147		800168	.05µF, 200V	C7	1	1		
148			S/A C3	C8	1	1		
149		800176	.1µF, 100V	C9	1	1		
151		821006	68µF, 15V	C11	1	1		
152		100063	10µF 25V	C12	1	1		
153		810161	200µF	C13	1	1		
155		100413	DIODE, 1N4004	CR1	2	1		
156			S/A CR1	CR2				
157		720410	1N4741 A	CR3	1	1		
158		100387	1N753 A	CR4	1	1		
159		720167	1N5221 B	CR5	1	1		
160		720384	1N4384	CR6	4	1		
161			S/A CR6	CR7				

REVISIONS

REV	DESCRIPTION

MODEL	JOB NO.	LOT QTY	LOT NO.	CODE IDENT
				52542

PLANNER

PREP DATE 10-23-75

CHK'D

MAT. DUE

APP'D

B/U REQ.

B/U COMP

USED ON

SYSTRON DONNER CORPORATION

SHIPPING ASS'Y
VPH5.2-30 MOV
S6489

DRAWING NO.

REV	SIZE	PART NO.
—	P	065115

SHEET 5 OF 8

FORM E8-A 11 JUL 75

ITEM NO.	REV	PART NUMBER	DESCRIPTION	REFERENCE NO.	ASSY QTY	ACT. CODE	ISS. QTY	SHT QTY
		PD25006 (CONT)	ASS'Y., COMP. BD.		-			
163		100415	DIODE, IN746 A	CR8	1	1		
164		741001	UN-SW 2N4990	CR9	1	1		
166		720440	IN 4148	CR11	1	1		
167			S/A CR6	CR12				
168			↓ ↓ ↓	CR13				
170		025756	I.C.	A1	1	1		
172		705068	TRANSISTOR, 2N 2219 A	Q1	1	1		
174		640390	RESISTOR, 220Ω, 2W, 10%	R1	1	1		
175								
176		600207	POT, 2K, ½W, 20%	R3	1	1		
177		620436	2.26K, ½W, 1%	R4	1	1		
178		620488	3.4K,	R5	1	1		
179		620534	4.64K,	R6	1	1		
180		620402	1.96K, ↓	R7	1	1		
181		106012	2.2Ω, ↓ 10%	R8	2	1		
184		600046	POT, 100Ω, ½W, 20%	R11	4	1		
185		101474	330Ω, ½W, 10%	R12	2	1		
186			S/A R12	R13				
187			↓ R8	R14				
188		640434	400Ω, 5W, 5%	R15	1	1		
189			S/A R11	R16				
190		640182	7.5Ω, 10W	R17	2	1		
191			S/A R17	R18				
192		640250	20Ω, 5W, 5%	R19	1	1		
193		640140	3.3Ω, 2W, 10%	R20	1	1		

MODEL	JOB NO.	LOT QTY	LOT NO.	CODE IDENT
				52542

PLANNER	PREP DATE	SYSTRON DONNER CORPORATION
	10-23-75	
	CHK'D	SHIPPING ASS'Y VPH5.2-30MOV S6489
MAT. DUE	APP'D	
B/U REQ.		DRAWING NO.
B/U COMP		REF — SIZE P PART NO. 065115 REV
	USED ON	SHEET 6 OF 8

REVISIONS DESCRIPTION

REV

FORM 68-A 11 JUL 76

www.manualsplus.com
1025364